T-SYSTEM

ZENEX MULTI & PLUS



IZEN
IMPLANT

ZENEX IMPLANT SYSTEM

ZENEX MULTI System 019

ZENEX PLUS System 073

ZENEX KIT 127

IZEN Implant,

innovative technology in pursuit of bright smile

Established in 2016 by developers and researchers who have spent more than 20 years on research and development in dental implants, IZEN Implant have working on developing innovative products to provide the best result to patients.
We will continue to grow into a company that meets customers' needs with safe and excellent products made of trust and continuous research and development.

IZEN Implant provides more convenient, stable, and optimized implant system by building product line-up with high-end technology of ZENEX MULTI and ZENEX PLUS.



Certification


SZUTEST
EC CERTIFICATE
According to Annex II of the Directive 93/42/EEC on Medical Devices
Full Quality Assurance System
Certificate Number: 2105-MED-2113601


SZUTEST
CERTIFICATE INFO AMENDMENT
SERTİFİKA BİLGİ DEĞİŞİKLİĞİ


SZUTEST
CERTIFICATE INFO AMENDMENT
SERTİFİKA BİLGİ DEĞİŞİKLİĞİ


SZUTEST
CERTIFICATE
Medical Devices Quality Management System
Izenimplant Co., Ltd.
EN ISO 13485:2016


SZUTEST
CERTIFICATE
Medical Devices Quality Management System
Izenimplant Co., Ltd.
EN ISO 13485:2016


SZUTEST
EC CERTIFICATE
According to Annex II of the Directive 93/42/EEC on Medical Devices
Full Quality Assurance System
Certificate Number: 2105-MED-2113601


특허증
CERTIFICATE OF PATENT
특허 제 10-1714533 호
위의 발명은 「특허법」에 따라 특허등록원부에 등록되었음을 증명합니다.
This is to certify that, in accordance with the Patent Act, a patent for the invention has been registered at the Korean Intellectual Property Office.
2017년 03월 03일
특허청장
COMMISSIONER,
KOREAN INTELLECTUAL PROPERTY OFFICE
최 등 규


특허증
CERTIFICATE OF PATENT
특허 제 10-1714541 호
위의 발명은 「특허법」에 따라 특허등록원부에 등록되었음을 증명합니다.
This is to certify that, in accordance with the Patent Act, a patent for the invention has been registered at the Korean Intellectual Property Office.
2017년 03월 03일
특허청장
COMMISSIONER,
KOREAN INTELLECTUAL PROPERTY OFFICE
최 등 규


특허증
CERTIFICATE OF PATENT
특허 제 10-2062575 호
위의 발명은 「특허법」에 따라 특허등록원부에 등록되었음을 증명합니다.
This is to certify that, in accordance with the Patent Act, a patent for the invention has been registered at the Korean Intellectual Property Office.
2019년 12월 30일
특허청장
COMMISSIONER,
KOREAN INTELLECTUAL PROPERTY OFFICE
박 원주


특허증
CERTIFICATE OF PATENT
특허 제 10-1684959 호
위의 발명은 「특허법」에 따라 특허등록원부에 등록되었음을 증명합니다.
This is to certify that, in accordance with the Patent Act, a patent for the invention has been registered at the Korean Intellectual Property Office.
2016년 12월 05일
특허청장
COMMISSIONER,
KOREAN INTELLECTUAL PROPERTY OFFICE
최 등 규


Kaltest
CERTIFICATE OF REGISTRATION
This certificate has been awarded to the company
Izenimplant Co., Ltd.
1, 2-dong, 26-32, Suworam 4-gil, Seotan-myeon, Pyeongtaek-si, Gyeonggi-do, Republic of Korea
To certify that the implemented quality management system complies with
ISO 9001:2015
For the activities described below
Design, Development and production of Dental Implant Superstructure(Abutment), Dental Implant Fixture, Dental Implant Instrument and Orthodontic Anchor
EAC 23
Kaltest Certification and Training Services Ltd. :


의료기기 제조 및 품질관리 기준 적합인정서
(Certificate of GMP)
GMP
KTR
KOREA TESTING & RESEARCH INSTITUTE


의료기기 제조 및 품질관리 기준 적합인정서
(Certificate of GMP)
GMP
KTC
Korea Testing Certification



History & Global Network



2016. 03
Foundation of IZEN Implant

2016. 06
Clearance of manufacturing licenses for medical devices Report medical device items (Screw driver for dental implant surgery)

2016. 12
Patent registration (Driver holder and driver apparatus for dental engineering, No. 10-1684959)

2017. 03
Patent registration (Driver holder for dental apparatus, No. 10-1714533, No. 10-1714541)

2018. 08
Venture Business Certificate (No. 20180110278)

2018. 09
Foundation of Corporate Affiliated Research Institute (No. 2018114470)

2019. 06
Clearance of small businesses technology development project (Development of Dental implant abutments and scan body for dental digital system)

2019. 12
Patent registration (Abutment and dental implant, No. 10-2062575)

2021. 05
Medical Device Item Certification (Dental implant Fixture)

2022. 04
FDA 510 Clearance (K211090)

2023. 07
Medical Device Item Certification (Dental implant Guide)

2023. 07
Clearance of FDA 510 (k230630)

2024. 05
Renewal of ISO 13485:2016 and CE MDD Certifications

2024. 06
Certification of compliance with KGMP (Korea Good Manufacturing Practice) Hwaseong Plant

2024. 09
ISO 13485:2016 and CE MDD Certification Hwaseong Plant

2024. 10
FDA 510(k) Clearance (K240560) ZENEX Implant System Long



IZEN
IMPLANT

Your companion armed with active
and flexible ideas for your satisfaction.

2017. 09
Registration of medical devices (Apparatus for dental implant surgery)

2018. 03
Certification of medical device items compliance with manufacturing and quality control standards (KGMP)

2018. 04
Medical Device Item Certification (Dental implant abutments)

2018. 07
Clearance of ISO 9001: 2015

2020. 01
Medical Device Item Certification (Orthodontic Screw)

2020. 12
Medical Device Item Certification (Dental implant abutments)

2021. 01
Patent registration (Implant Lab Analog, No. 10-2209274)

2021. 05
Clearance of ISO13485: 2016 & CE MDD

2023. 08
FDA 510(k) Clearance (K231557) ZENEX Implant System FreeMilling & CCM Cast Abutment

2023. 10
Patent registration (Assistant device for Implant Surgical guide No. 2088060)

2023. 12
FDA 510(k) Clearance (K233163) ZENEX Implant System Short

2024. 01
FDA 510(k) Clearance (K232170) Ti Link Abutment

MANUFACTURER

Manufacturing



Materials

Fixture and Abutment of ZENEX MULTI & ZENEX PLUS Implant System are produced by titanium which is certified by ASTM.

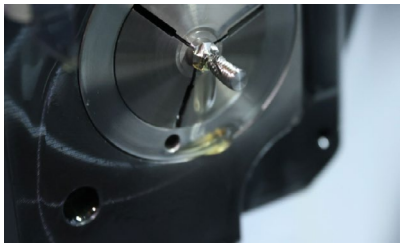

Manufacture by CNC Machine

In order to product Fixture and Abutment of ZENEX MULTI & Zenex PLUS Implant System, the raw materials are manufactured by CNC Machine.



Manufacture of Half-Finished product

Fixture and Abutment of ZENEX MULTI & Zenex PLUS Implant System are manufactured as a Half-Finished product based on a design of each product.

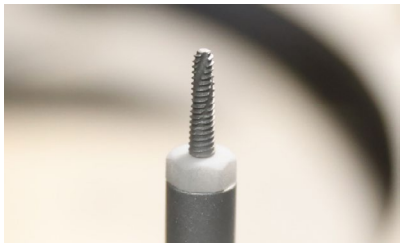

Sand Blasting

In case of Fixture, the roughness of surface is increased physically by blasting Alumina Powder for osseointegration through getting a wide SLA surface.

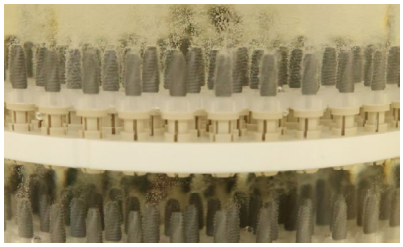

Etching

In case of Fixture, the roughness of surface is widen by chemical corrosion. After a SLA surface treatment, the surface inspection is done whether any residual acid is on the fixture.



TiN Coating

For classifying product and aesthetic impression, the electronic-chemical methods are used artificially for TiN coating as a gold color. Applied for some kinds of Abutments.

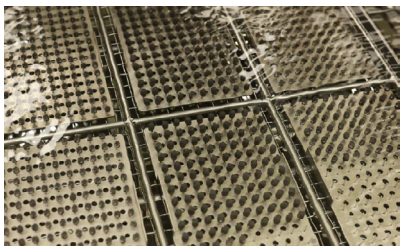

Cleaning

Final cleaning for a perfect removal of pollutant is proceeded in the Clean Room. After final cleaning, the inspection will be taken place.

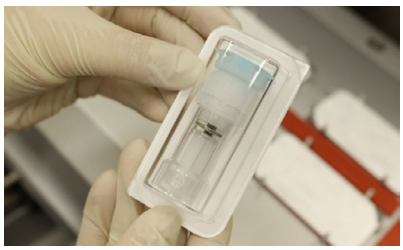

Packing

After cleaning products, the packing is done in the Clean Room. The packing is proceeded by automatic system without any foreign pollution.



Sterilization

For some products, it is sterilized by the short-wavelength of gamma radiation. It is possible to check the sterilization through a color of sticker on the package changed by a gamma radiation. Applied product: Fixture, Cover Screw, Healing Abutment & Multi Healing Cap.

Quality Management

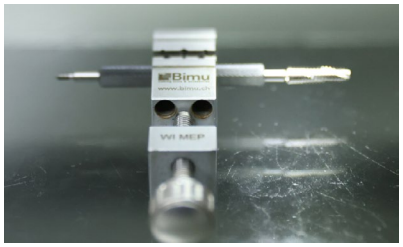

Dimension Management

After manufacturing product (fixture), Dimension of product is tested by non-contact visual microscope to measure precise dimension.



Stability of product

Our products are tested by fixation force and screw loosening for providing a stable product.

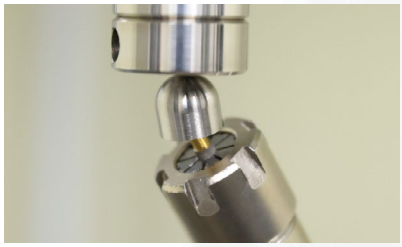

Fatigue Test

For providing the strength of product and a long-term safety, a fatigue test is done by measuring a mechanical force. Based on ISO14801:2016, the test is taken place.

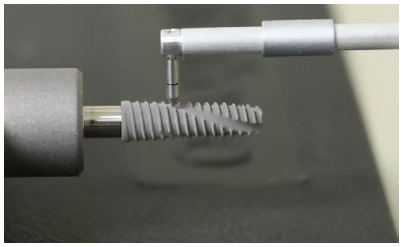

Surface management

In order to maintain a stable roughness of SLA Implant surface, the roughness of surface is tested in each lot.

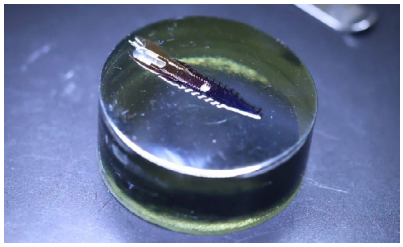

Connection Management

We observe the fixture and abutment are connected internally without any problem before the shipment.

ZENEX MULTI T-System Contents

024 ZENEX MULTI T-System Fixture 

027 Cover Screw 

028 Healing Abutment 

031 Temporary Abutment 

032 Cemented Abutment 

037 Angled Abutment 

040 FreeMilling Abutment 

042 CCM Cast Abutment 

043 Pick-up Impression Coping 

045 Transfer Impression Coping 

047 Fixture Lab Analog 

049 Multi Straight Abutment 

050 Multi Angled Abutment 

052 Multi Temporary Cylinder 

052 Multi CCM Cast Cylinder 

053 Multi Plastic Cast Cylinder 

053 Multi Ti Link Cylinder 

054 Multi Pick-up Impression Coping 

054 Multi Transfer Impression Coping 

055 Multi Lab Analog 

055 Multi Healing Cap 

056 Multi ScanBody 

057 Multi Straight Abutment Driver 

059 Ball Abutment 

060 Ball Abutment Cap Set 

060 Ball Abutment Retainer Set 

061 Ball Abutment O-ring Set 

061 Ball Abutment Lab Analog 

062 Ball Abutment Driver 

063 Kerator Abutment 

064 Kerator Angled Abutment 

065 Kerator CDPH Set 

065 Kerator Male Cap 

066 Kerator Magic Tool 

066 Kerator Torque Tip 

067 Kerator Impression Coping 

067 Kerator Lab Analog 

069 ScanBody 

070 Ti Link Abutment 

071 Ti Blank Abutment 

ZENEX PLUS T-System Contents

078 ZENEX PLUS T-System Fixture 

081 Cover Screw 

082 Healing Abutment 

085 Temporary Abutment 

086 Cemented Abutment 

091 Angled Abutment 

094 FreeMilling Abutment 

096 CCM Cast Abutment 

097 Pick-up Impression Coping 

099 Transfer Impression Coping 

101 Fixture Lab Analog 

103 Multi Straight Abutment 

104 Multi Angled Abutment 

106 Multi Temporary Cylinder 

106 Multi CCM Cast Cylinder 

107 Multi Plastic Cast Cylinder 

107 Multi Ti Link Cylinder 

108 Multi Pick-up Impression Coping 

108 Multi Transfer Impression Coping 

109 Multi Lab Analog 

109 Multi Healing Cap 

110 Multi ScanBody 

110 Multi Straight Abutment Driver 

113 Ball Abutment 

114 Ball Abutment Cap Set 

114 Ball Abutment Retainer Set 

115 Ball Abutment O-ring Set 

115 Ball Abutment Lab Analog 

116 Ball Abutment Driver 

117 Kerator Abutment 

118 Kerator Angled Abutment 

119 Kerator CDPH Set 

119 Kerator Male Cap 

120 Kerator Magic Tool 

120 Kerator Torque Tip 

121 Kerator Impression Coping 

121 Kerator Lab Analog 

123 ScanBody 

124 Ti Link Abutment 

125 Ti Blank Abutment 

Kit Contents

130 ZENEX SURGERY KIT 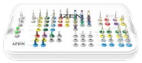

133 Guide Drill 

133 Lindemann Drill

134 Drill Extension 

134 Twist Drill 

135 Step Drill 

136 Drill Stopper 

136 Cortical Drill 

137 Direction Pin 

138 Parallel Pin 

138 Fixture Driver 

140 1.2 Hex Driver 

140 Torque Wrench 

141 Depth Gauge 

141 Steel Bowl 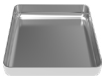

146 ZENEX SIMPLE KIT 

148 Guide Drill 

148 Lindemann Drill

149 Drill Extension 

149 Twist Drill 

150 Drill Stopper 

150 Cortical Drill 

151 Direction Pin 

152 Parallel Pin 

152 Fixture Driver 
154 1.2 Hex Driver 
154 Torque Wrench 
155 Depth Gauge 
158 ZENEX EASY SURGERY KIT 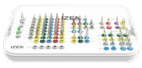
161 Guide Drill 
161 Lindemann Drill
162 Drill Extension 
162 Step Drill 
164 Cortical Drill 
164 Direction Pin 
165 Parallel Pin 
165 Fixture Driver 
167 1.2 Hex Driver 
167 Torque Wrench 
168 Depth Gauge 
168 Steel Bowl 
172 ZENEX SUPERWIDE KIT 
175 Guide Drill 
175 Lindemann Drill
176 Drill Extension 
176 Step Drill 
177 Cortical Drill 
177 Direction Pin 

Kit Contents

178 Parallel Pin 

178 Fixture Driver 

180 1.2 Hex Driver 

180 Torque Wrench 

181 Depth Gauge 

184 ZENEX PROSTHETIC KIT 

186 1.2 Hex Driver 

186 1.2 Hex Machine Screw Driver 

187 Abutment Remover 

187 Finger Driver for Driver Shaft 

188 Ball Abutment Driver 

188 Multi Straight Abutment Driver 

189 Torque Wrench 

189 Kerator Magic Tool 

190 Kerator Torque Tip 

192 ZENEX GUIDE KIT 

195 ZENEX Guide Tissue Punch 

195 ZENEX Guide Flattening Drill 

196 Drill Extension 

196 ZENEX Guide Initial Drill 

197 ZENEX Guide Twist Drill 

198 ZENEX Guide Cortical Drill 

198 ZENEX Guide Fixture Driver 

200 ZENEX Guide Anchor Drill 

200 ZENEX Guide Anchor Screw 

201 Mount Driver 

201 Shank Driver 

202 1.2 Hex Driver 

202 Torque Wrench 

203 Depth Gauge 

203 Steel Bowl 

208 ZENEX GUIDE MINI KIT 

211 ZENEX Guide Tissue Punch 

211 ZENEX Guide Flattening Drill 

212 Drill Extension 

212 ZENEX Guide Initial Drill 

213 ZENEX Guide Twist Drill 

214 ZENEX Guide Cortical Drill 

214 ZENEX Guide Fixture Driver 

216 Shank Driver 

216 1.2 Hex Driver 

217 Torque Wrench 

217 Depth Gauge 

220 ZENEX GUIDE WIDE KIT 

223 ZENEX Guide Tissue Punch 

223 ZENEX Guide Flattening Drill 

224 Drill Extension 

224 ZENEX Guide Initial Drill 

Kit Contents

225 ZENEX Guide Twist Drill 

226 ZENEX Guide Cortical Drill 

226 ZENEX Guide Fixture Driver 

228 Shank Driver 

228 1.2 Hex Driver 

229 Torque Wrench 

229 Depth Gauge 

246 Tissue Punch 

246 Trephine Drill 

247 Bone Profiler 

248 ZENEX Guide Start Drill 

ZENEX MULTI
T-System

ZENEX MULTI T-System

COMPOSITION

024 ZENEX MULTI T-System Fixture
027 Cover Screw
028 Healing Abutment
030 Prosthetic Flow Chart I
031 Temporary Abutment
032 Cemented Abutment
037 Angled Abutment
040 FreeMilling Abutment
042 CCM Cast Abutment
043 Pick-up Impression Coping
045 Transfer Impression Coping
047 Fixture Lab Analog
048 Prosthetic Flow Chart II
049 Multi Straight Abutment
050 Multi Angled Abutment
052 Components of Multi Abutment
058 Prosthetic Flow Chart III
059 Ball Abutment
060 Components of Ball Abutment
063 Kerator Abutment
064 Kerator Angled Abutment
065 Components of Kerator Abutment
068 **Prosthetic Flow Chart IV**
069 ScanBody
070 Ti Link Abutment
071 Ti Blank Abutment

ZENEX MULTI T-System

- Design features

- Designed for various types of bone

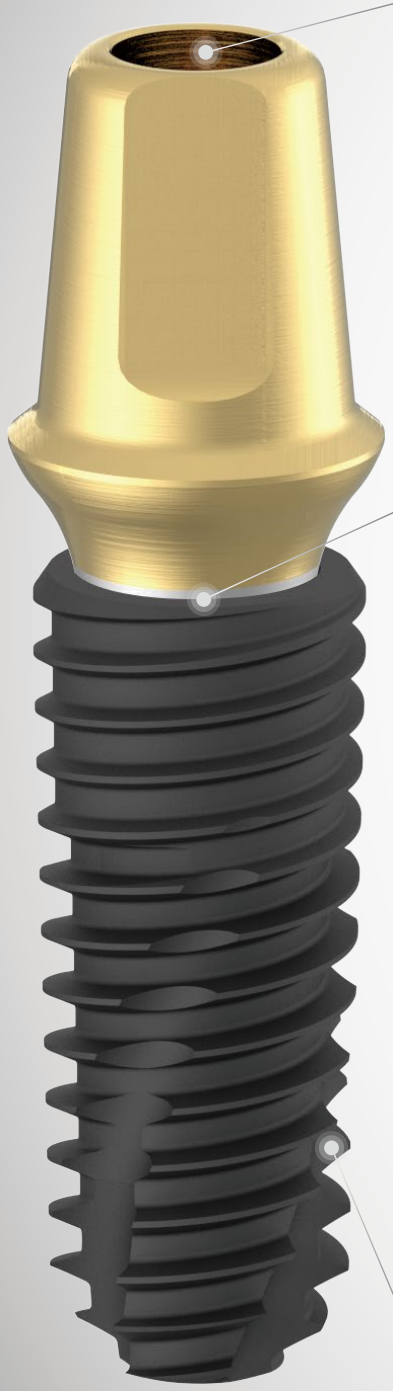

Post shape (Rounded top) optimized for digital dentistry system
Wide cross-section to prevent crown rotation and secure accurate placement.
Wide marginal area to prevent crown fracture
Small screw guide hole to secure strength of abutment
Optimized abutment screw for Short Fixture



Deep hex hole to prevent abutment rotation

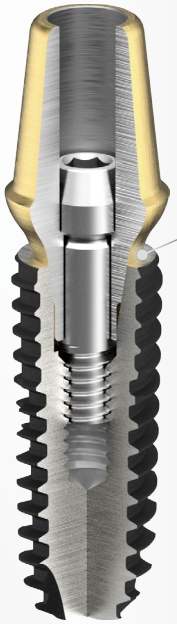

Platform Switching
Prevents crestal bone loss after implant placement
and provides esthetic result

Tapered design to secure initial stability
Possible to secure initial stability on apex of fixture by realizing wide apical diameter.
0.8 Pitch double thread helps to reduce time for implant placement

ZENEX MULTI Implant
- Surface features

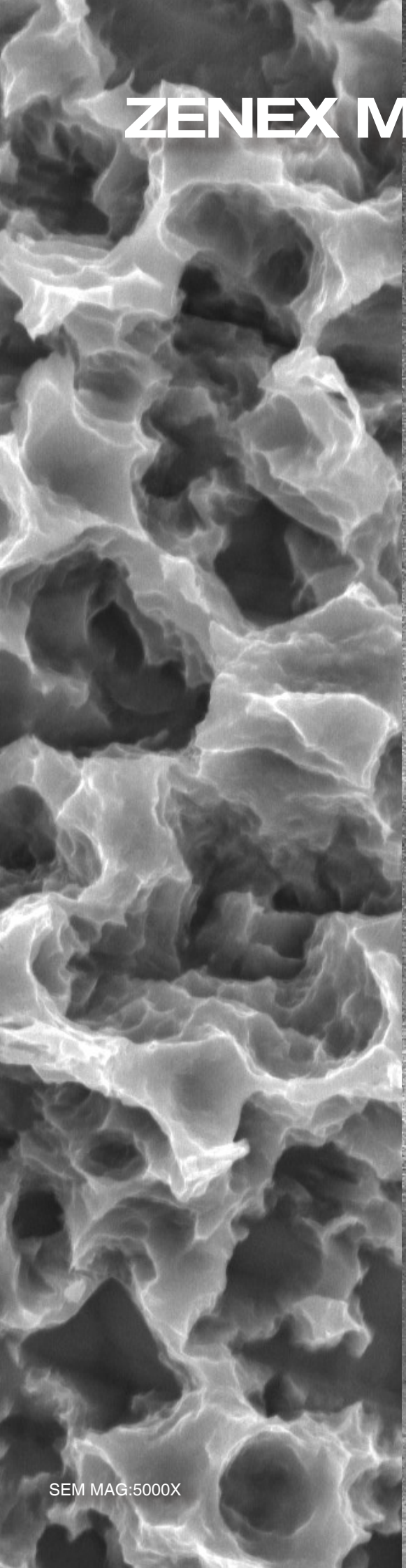

SEM MAG:5000X

SEM MAG:30X

SLA surface
($Al_2 O_3$ powder Sand-blast and Acid Etched)

- SLA surface for presenting ideal surface shape
- Surface Roughness Ra 2.0~3.0㎛

- Safe surface with no residual acid
- Safer than other implants (Proved by ICP/IC Analysis)

ZENEX MULTI Fixture T - System

Internal 11° tapered submerged type implant
SLA surface implant
Tapered design to secure initial stability
Double thread design for securing width of internal connection and easy insertion
Possible to secure initial stability on apex of fixture by realizing wide apical diameter.
Recommended torque for implant placement: Less than 30~45Ncm
Material: Titanium

For Wide Fixture (Ø5.0, Ø5.5, Ø6.0, Ø7.0)
- Wide fixture with single thread for easy implant placement.
- 6mm length fixture enables to use in lower alveolar bone
- Radial shaped on upper part of fixture enables to be used for wide hole such as extraction socket

* Recommend to use fixture bigger than Ø4.5 mm for single case in posterior area

To order as a set as 'Fixture + Cover Screw'
: Product Code + S (ex: ZMTM3508S)

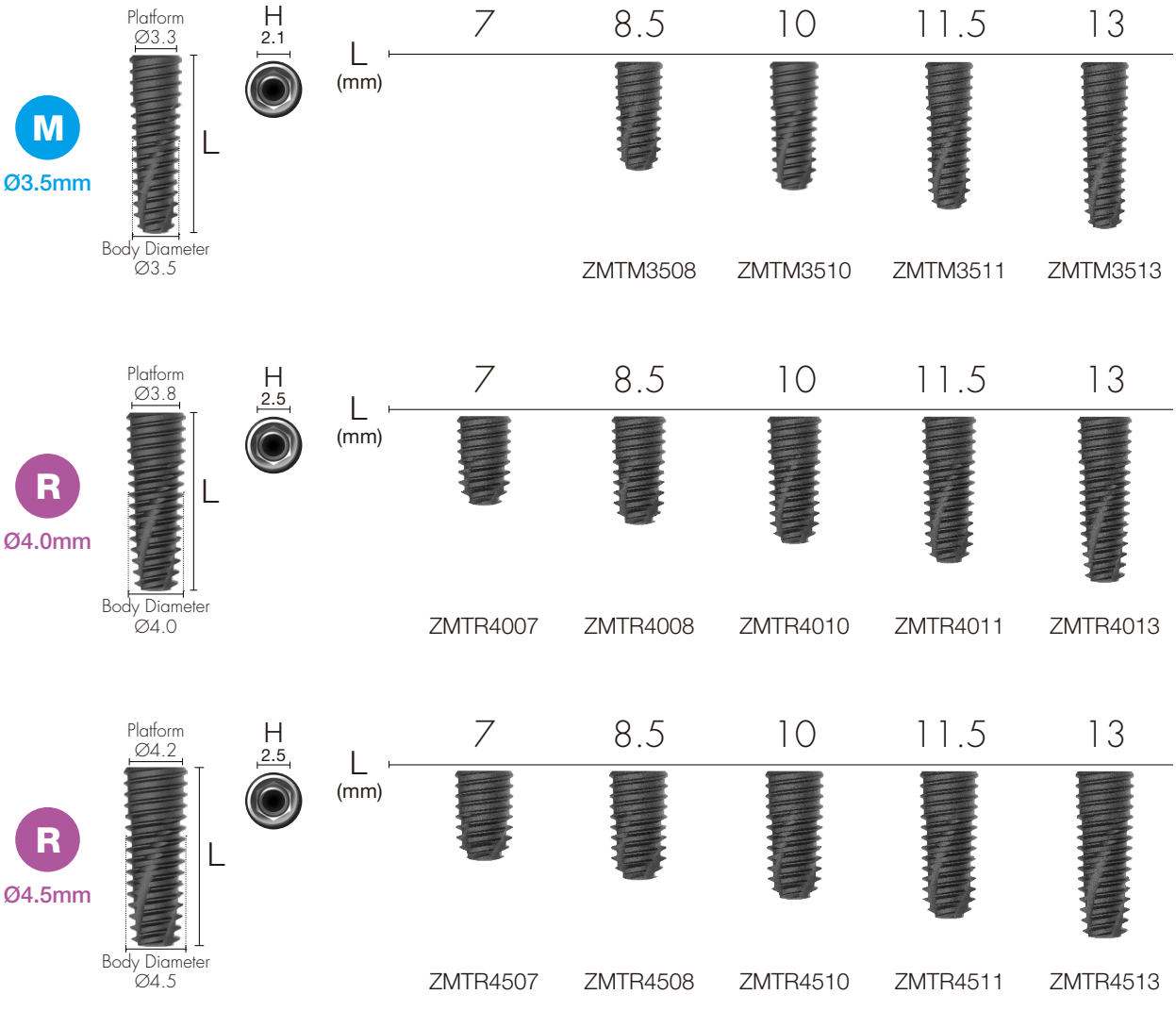

Nominal diameter may differ from actual diameter

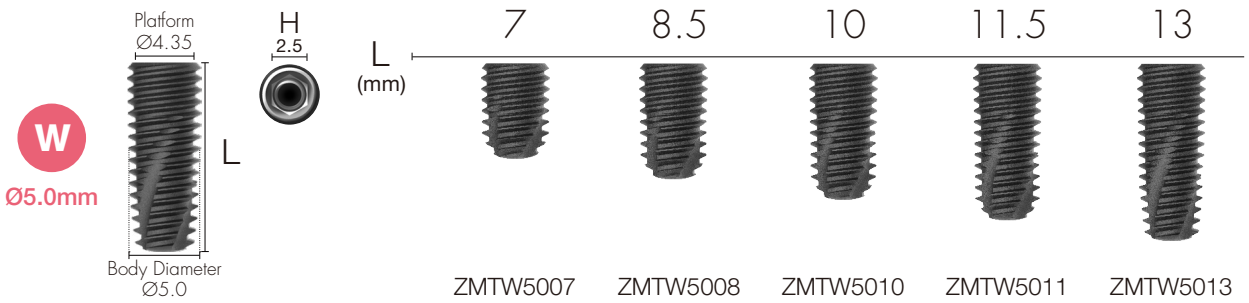

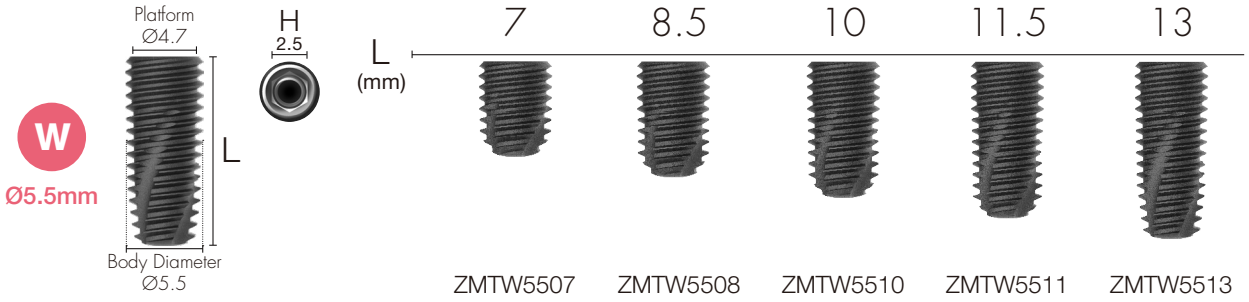

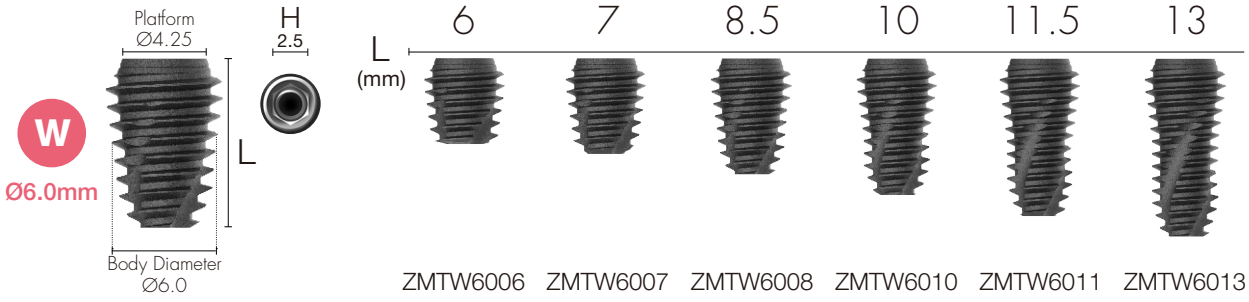

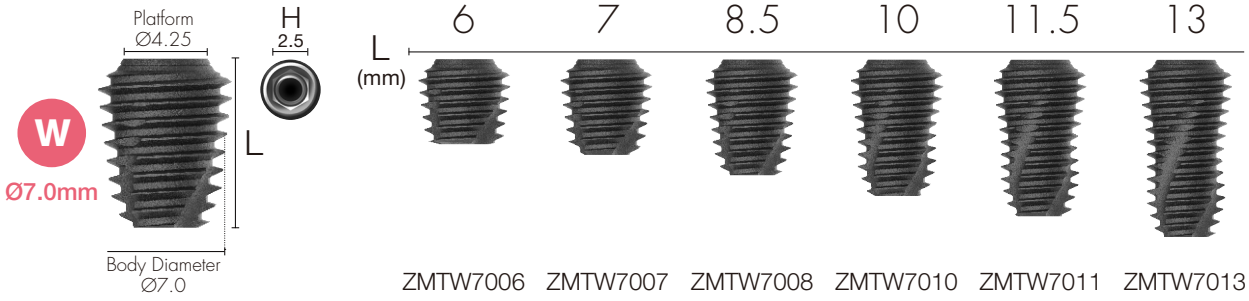

Nominal diameter may differ from actual diameter

Special Options

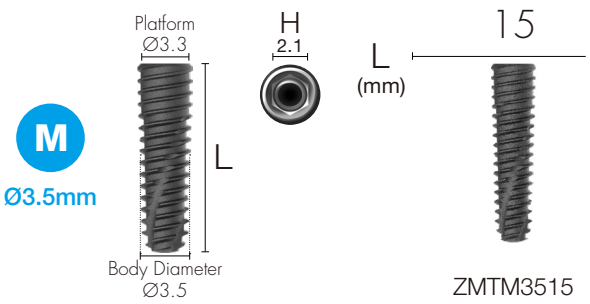

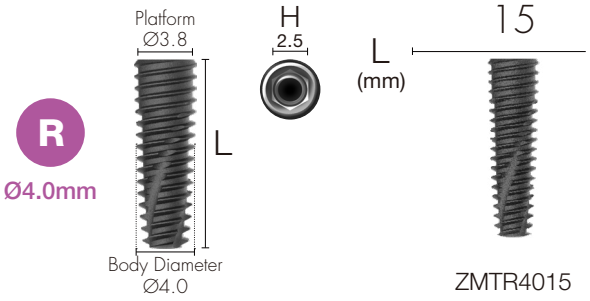

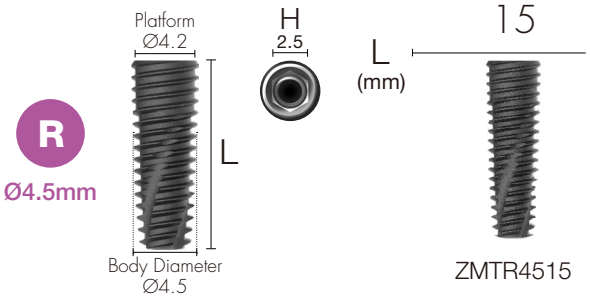

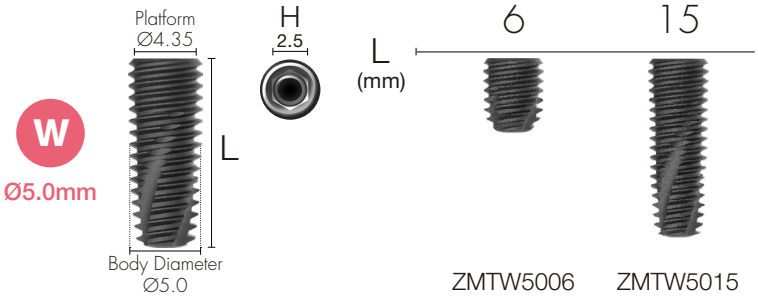

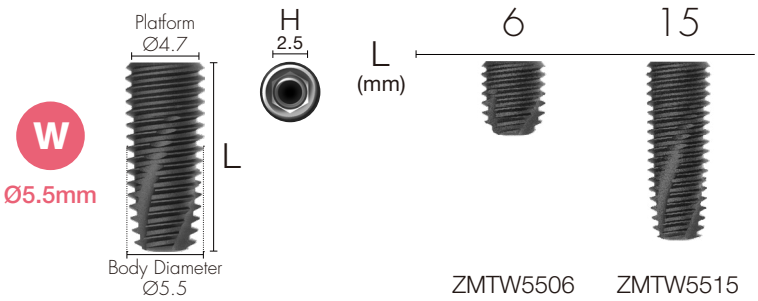

Nominal diameter may differ from actual diameter

Cover Screw

Select appropriate fixture height upon depth of implant placement.
Select specification fits for fixture connection.
Material: Titanium alloy

Tighten with 1.2 Hex Driver by hand.
Recommended tightening torque: 5~8Ncm

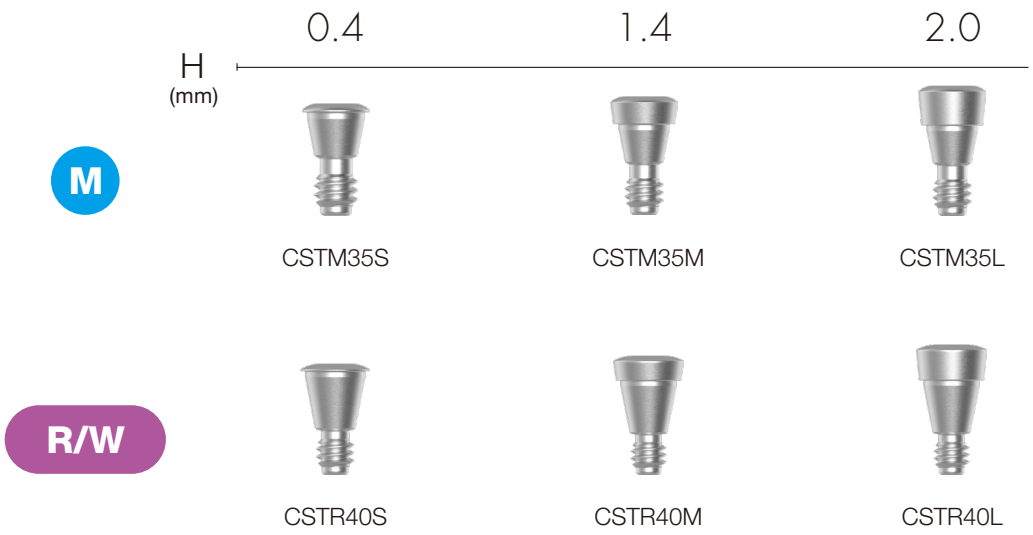

Healing Abutment

Use Healing Abutment fits for the diameter of abutment.
Use specification fits for fixture connection.
Material: Titanium alloy

Tighten with 1.2 Hex Driver by hand.
Recommended tightening torque: 5~8Ncm

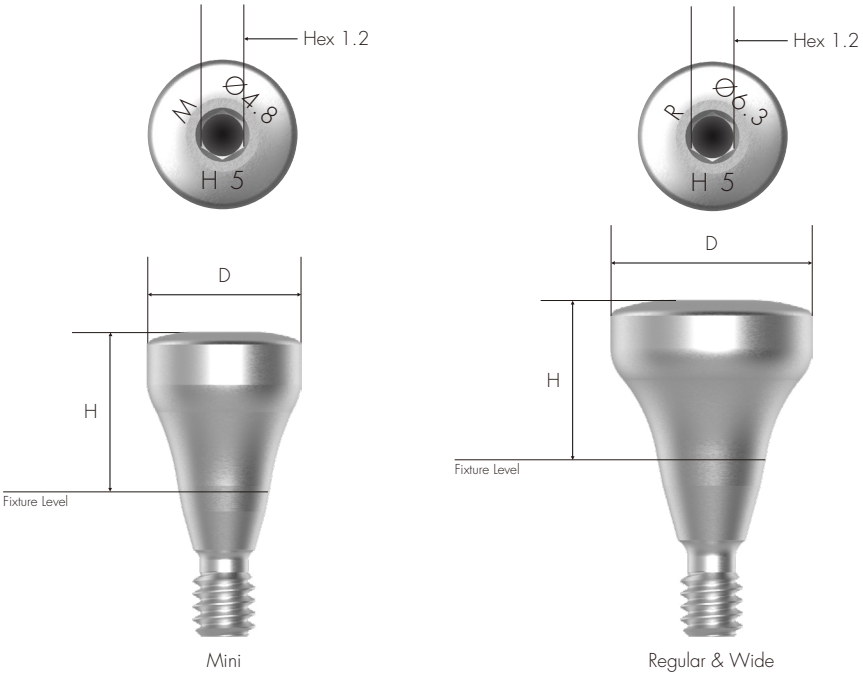

M

H (mm)	3.0	4.0	5.0	7.0	9.0
D (mm)					
Ø4.3	HATM403	HATM404	HATM405	HATM407	HATM409
Ø4.8	HATM453	HATM454	HATM455	HATM457	HATM459

R/W

H (mm) / D (mm)	3.0	4.0	5.0	7.0	9.0
					
∅4.3	HATR403	HATR404	HATR405	HATR407	HATR409
∅4.8	HATR453	HATR454	HATR455	HATR457	HATR459
∅5.3	HATR503	HATR504	HATR505	HATR507	HATR509
∅6.3	HATR603	HATR604	HATR605	HATR607	HATR609
∅7.3	HATR703	HATR704	HATR705	HATR707	HATR709
∅8.3	HATR803	HATR804	HATR805		

Prosthetic Flow Chart I



Temporary Abutment

31 p



Cemented Abutment

32 p

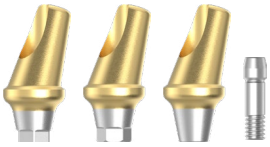

Angled Abutment

37 p



FreeMilling Abutment

40 p



CCM Cast Abutment

42 p



Fixture Lab Analog

47 p



Pick-up Impression Coping

43 p



Transfer Impression Coping

45 p



Cover Screw

27 p



Healing Abutment

28 p



1.2 Hex Driver

140 p



ZENEX MULTI Fixture

24 p

Temporary Abutment

Abutment for manufacturing Screw-retained type temporary prosthesis
Select specification fits for fixture connection.
Fixture Level Impression
Material: Titanium alloy

Tighten with 1.2 Hex Driver.
Recommended tightening torque: 20Ncm

To order as a set as 'Abutment + Abutment Screw'
: Product Code + S (ex: TATRH4510S)

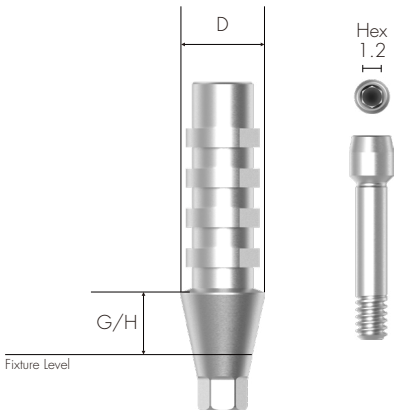

Mini

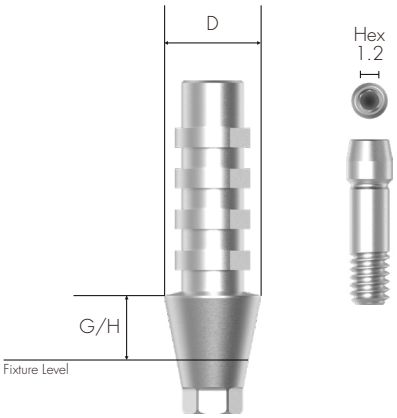

Regular & Wide

M
D Ø4.0mm

G/H (mm)

1.0		3.0	
			
Hex	Non-Hex	Hex	Non-Hex
TATMH4010	TATMN4010	TATMH4030	TATMN4030

R/W
D Ø4.5mm

G/H (mm)

1.0		3.0	
			
Hex	Non-Hex	Hex	Non-Hex
TATRH4510	TATRN4510	TATRH4530	TATRN4530

Cemented Abutment

Abutment for manufacturing Cement/Combination-retained type prosthesis
Select specification fits for fixture connection.
Customized by grinding (At least 3.0mm of Abutment Length above Fixture Platform needs to be maintained)
Fixture Level Impression
Material: Titanium alloy

Tighten with 1.2 Hex Driver.
Recommended tightening torque: 30Ncm

To order as a set as 'Abutment + Abutment Screw'
: Product Code + S (ex: CATRH45105S)

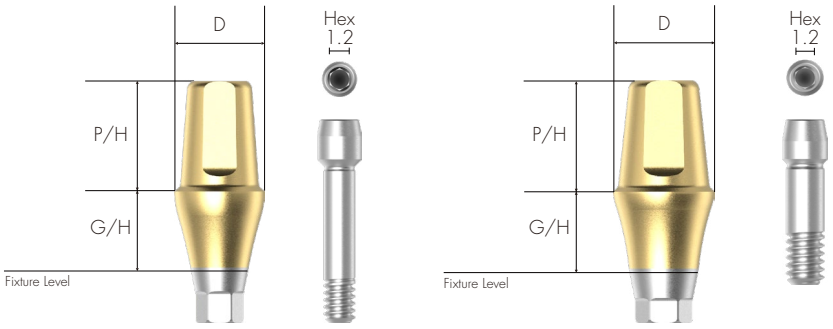

M
D ∅4.0mm

	G/H (mm)	1.0	2.0	3.0	4.0
	P/H (mm)				
Hex	5.5	CATMH40105	CATMH40205	CATMH40305	CATMH40405
	7.0	CATMH40107	CATMH40207	CATMH40307	CATMH40407
Non-Hex	5.5	CATMN40105	CATMN40205	CATMN40305	CATMN40405
	7.0	CATMN40107	CATMN40207	CATMN40307	CATMN40407

M
D ∅4.0mm

	G/H (mm)	5.0	6.0	7.0
	P/H (mm)			
Hex	5.5	CATMH40505	CATMH40605	CATMH40705
	7.0	CATMH40507	CATMH40607	CATMH40707
Non-Hex	5.5	CATMN40505	CATMN40605	CATMN40705
	7.0	CATMN40507	CATMN40607	CATMN40707

M

D Ø4.5mm

G/H (mm)	P/H (mm)	1.0	2.0	3.0	4.0
					
Hex	5.5	CATMH45105	CATMH45205	CATMH45305	CATMH45405
	7.0	CATMH45107	CATMH45207	CATMH45307	CATMH45407
Non-Hex	5.5	CATMN45105	CATMN45205	CATMN45305	CATMN45405
	7.0	CATMN45107	CATMN45207	CATMN45307	CATMN45407

M

D Ø4.5mm

G/H (mm)	P/H (mm)	5.0	6.0	7.0
				
Hex	5.5	CATMH45505	CATMH45605	CATMH45705
	7.0	CATMH45507	CATMH45607	CATMH45707
Non-Hex	5.5	CATMN45505	CATMN45605	CATMN45705
	7.0	CATMN45507	CATMN45607	CATMN45707

R/W

D Ø4.5mm

G/H (mm)	P/H (mm)	1.0	2.0	3.0	4.0
					
Hex	5.5	CATRH45105	CATRH45205	CATRH45305	CATRH45405
	7.0	CATRH45107	CATRH45207	CATRH45307	CATRH45407
Non-Hex	5.5	CATRN45105	CATRN45205	CATRN45305	CATRN45405
	7.0	CATRN45107	CATRN45207	CATRN45307	CATRN45407

R/W

D Ø4.5mm

	G/H (mm)	5.0	6.0	7.0
				
	P/H (mm)			
Hex	5.5	CATRH45505	CATRH45605	CATRH45705
Hex	7.0	CATRH45507	CATRH45607	CATRH45707
Non-Hex	5.5	CATRN45505	CATRN45605	CATRN45705
Non-Hex	7.0	CATRN45507	CATRN45607	CATRN45707

R/W

D Ø5.0mm

	G/H (mm)	1.0	2.0	3.0	4.0
					
	P/H (mm)				
Hex	4.0	CATRH50104	CATRH50204	CATRH50304	CATRH50404
Hex	5.5	CATRH50105	CATRH50205	CATRH50305	CATRH50405
Hex	7.0	CATRH50107	CATRH50207	CATRH50307	CATRH50407
Non-Hex	4.0	CATRN50104	CATRN50204	CATRN50304	CATRN50404
Non-Hex	5.5	CATRN50105	CATRN50205	CATRN50305	CATRN50405
Non-Hex	7.0	CATRN50107	CATRN50207	CATRN50307	CATRN50407

R/W

D Ø5.0mm

	G/H (mm)	5.0	6.0	7.0
				
	P/H (mm)			
Hex	4.0	CATRH50504	CATRH50604	CATRH50704
Hex	5.5	CATRH50505	CATRH50605	CATRH50705
Hex	7.0	CATRH50507	CATRH50607	CATRH50707
Non-Hex	4.0	CATRN50504	CATRN50604	CATRN50704
Non-Hex	5.5	CATRN50505	CATRN50605	CATRN50705
Non-Hex	7.0	CATRN50507	CATRN50607	CATRN50707

R/W

D Ø6.0mm

	G/H (mm)	1.0	2.0	3.0	4.0
					
	P/H (mm)				
Hex	4.0	CATRH60104	CATRH60204	CATRH60304	CATRH60404
	5.5	CATRH60105	CATRH60205	CATRH60305	CATRH60405
	7.0	CATRH60107	CATRH60207	CATRH60307	CATRH60407
Non-Hex	4.0	CATRN60104	CATRN60204	CATRN60304	CATRN60404
	5.5	CATRN60105	CATRN60205	CATRN60305	CATRN60405
	7.0	CATRN60107	CATRN60207	CATRN60307	CATRN60407

R/W

D Ø6.0mm

	G/H (mm)	5.0	6.0	7.0
				
	P/H (mm)			
Hex	4.0	CATRH60504	CATRH60604	CATRH60704
	5.5	CATRH60505	CATRH60605	CATRH60705
	7.0	CATRH60507	CATRH60607	CATRH60707
Non-Hex	4.0	CATRN60504	CATRN60604	CATRN60704
	5.5	CATRN60505	CATRN60605	CATRN60705
	7.0	CATRN60507	CATRN60607	CATRN60707

R/W

D Ø7.0mm

	G/H (mm)	1.0	2.0	3.0	4.0
					
	P/H (mm)				
Hex	4.0	CATRH70104	CATRH70204	CATRH70304	CATRH70404
	5.5	CATRH70105	CATRH70205	CATRH70305	CATRH70405
Non-Hex	4.0	CATRN70104	CATRN70204	CATRN70304	CATRN70404
	5.5	CATRN70105	CATRN70205	CATRN70305	CATRN70405

R/W

D Ø7.0mm

	G/H (mm)	5.0	6.0	7.0
				
	P/H (mm)			
Hex	4.0	CATRH70504	CATRH70604	CATRH70704
	5.5	CATRH70505	CATRH70605	CATRH70705
Non-Hex	4.0	CATRN70504	CATRN70604	CATRN70704
	5.5	CATRN70505	CATRN70605	CATRN70705

Angled Abutment

Abutment for manufacturing Cement/Combination-retained type prosthesis
Select specification fits for fixture connection.
Fixture Level Impression
Can be positioned in 12 directions by selecting A or B type
Material: Titanium alloy

Tighten with 1.2 Hex Driver.
Recommended tightening torque: 30Ncm

To order as a set as 'Abutment + Abutment Screw'
: Product Code + S (ex: AATRA45172S)

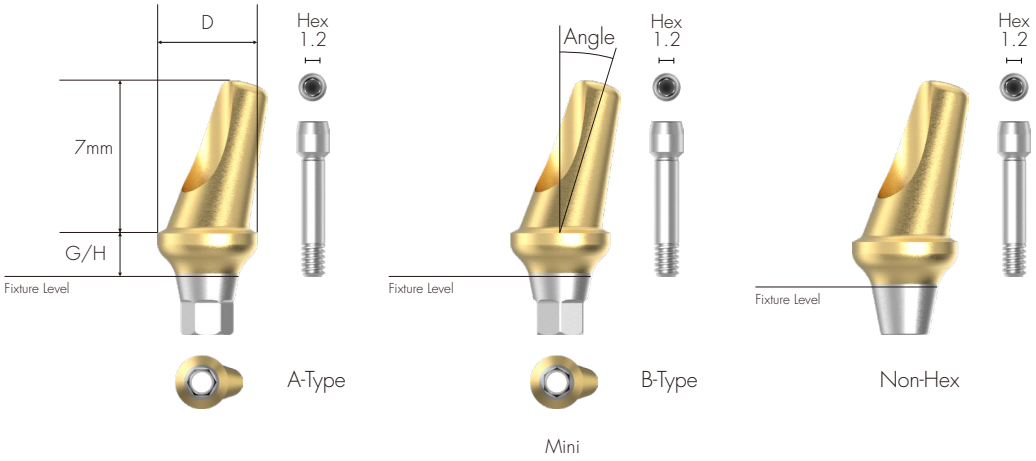

M
D Ø4.0mm

G/H (mm)	2.0	4.0
Angle 17°		
A-Type	AATMA40172	AATMA40174
B-Type	AATMB40172	AATMB40174
Non-Hex	AATMN40172	AATMN40174

M
D Ø4.5mm

G/H (mm)	2.0	4.0
Angle 17°		
A-Type	AATMA45172	AATMA45174
B-Type	AATMB45172	AATMB45174
Non-Hex	AATMN45172	AATMN45174

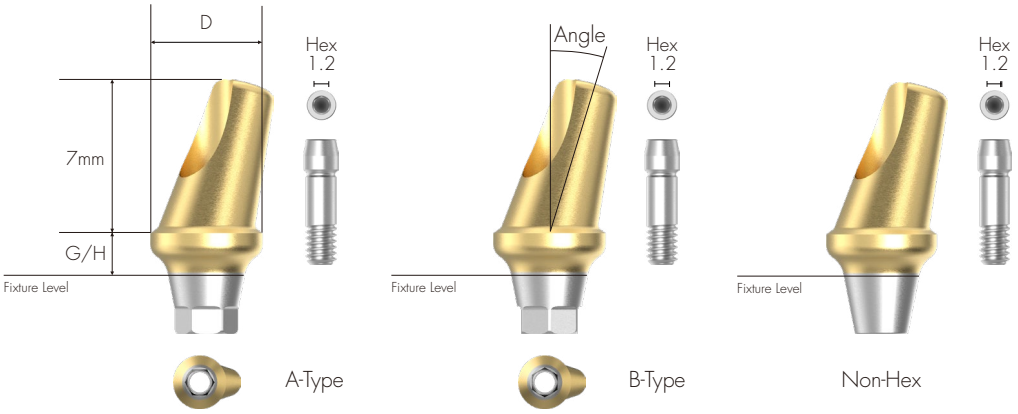

Regular & Wide

R/W

D Ø4.5mm

G/H (mm)	2.0	4.0
Angle 17°		
A-Type	AATRA45172	AATRA45174
B-Type	AATRB45172	AATRB45174
Non-Hex	AATRN45172	AATRN45174

R/W

D Ø5.0mm

G/H (mm)	2.0	4.0
Angle 17°		
A-Type	AATRA50172	AATRA50174
B-Type	AATRB50172	AATRB50174
Non-Hex	AATRN50172	AATRN50174

R/W

D Ø6.0mm

G/H (mm)	2.0	4.0
Angle 17°		
A-Type	AATRA60172	AATRA60174
B-Type	AATRB60172	AATRB60174
Non-Hex	AATRN60172	AATRN60174

FreeMilling Abutment

Abutment for manufacturing Cement/Combination-retained type prosthesis
Used when creating free marginal space for Abutment
Select specification fits for fixture Connection
Customized by grinding (At least 3.0mm of Abutment Length above Fixture Platform needs to be maintained)
Fixture Level Impression
Material: Titanium alloy

Tighten with 1.2 Hex Driver
Recommended tightening torque: 30Ncm

To order as a set as 'Abutment + Abutment Screw'
: Product Code + S (ex: FMATRH40159S)

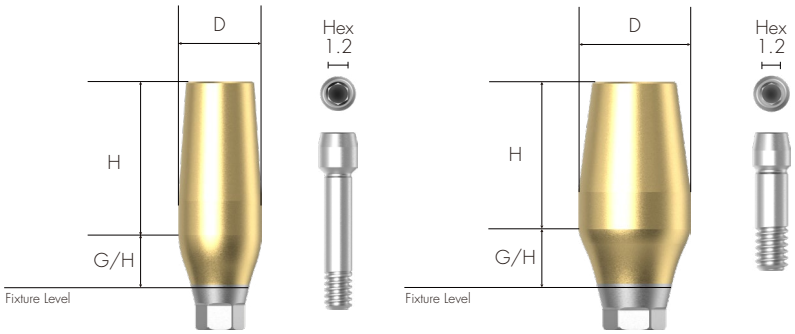

Mini　　Regular & Wide

M
D Ø4.0mm
H 9.0mm

G/H (mm)

1.5		3.0	
			
Hex	Non-Hex	Hex	Non-Hex
FMATMH40159	FMATMN40159	FMATMH40309	FMATMN40309

R/W
D Ø4.0mm
H 9.0mm

G/H (mm)

1.5		3.0	
			
Hex	Non-Hex	Hex	Non-Hex
FMATRH40159	FMATRN40159	FMATRH40309	FMATRN40309

R/W

D Ø5.0mm
H 8.0mm

G/H (mm)

1.5		3.0	
			
Hex	Non-Hex	Hex	Non-Hex
FMATRH50158	FMATRN50158	FMATRH50308	FMATRN50308

R/W

D Ø6.0mm
H 8.0mm

G/H (mm)

1.5		3.0	
			
Hex	Non-Hex	Hex	Non-Hex
FMATRH60158	FMATRN60158	FMATRH60308	FMATRN60308

R/W

D Ø7.0mm
H 8.0mm

G/H (mm)

1.5		3.0	
			
Hex	Non-Hex	Hex	Non-Hex
FMATRH70158	FMATRN70158	FMATRH70308	FMATRN70308

CCM Cast Abutment

Abutment for manufacturing customized abutment in difficult and complicated cases
Select specification fits for fixture connection
Fixture Level Impression
Casting with non-precious alloy for manufacturing customized prosthesis
Melting point of CCM : 1,400 ~ 1,550°C
Material: Co-Cr-Mo alloy

Tighten with 1.2 Hex Driver.
Recommended tightening torque: 30Ncm

To order as a set as 'Abutment + Abutment Screw'
: Product Code + S (ex: CCATRH4510S)

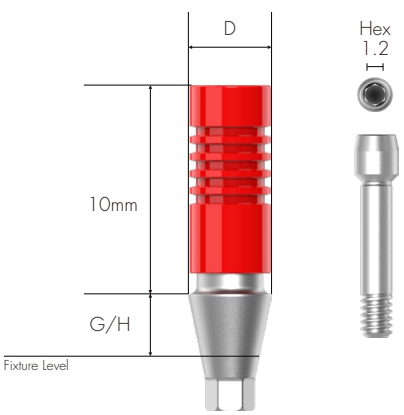

Mini

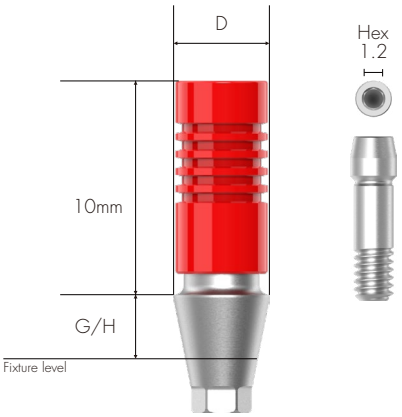

Regular & Wide

M

D ∅4.0mm

G/H (mm)

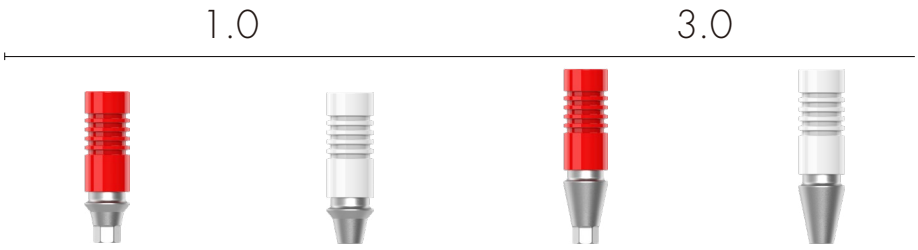

Hex	Non-Hex	Hex	Non-Hex
CCATMH4010	CCATMN4010	CCATMH4030	CCATMN4030

R/W

D ∅4.5mm

G/H (mm)

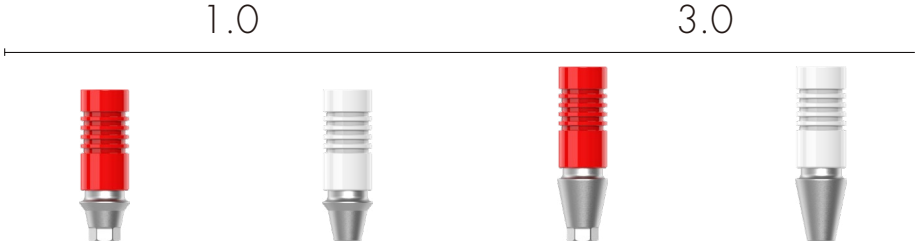

Hex	Non-Hex	Hex	Non-Hex
CCATRH4510	CCATRN4510	CCATRH4530	CCATRN4530

Pick-up Impression Coping

Components for Fixture Level Impression
Open Tray Type
Select specification fits for fixture connection
Enables accurate impression with design of stably fixed in impression material
Material: Titanium alloy

Tighten with 1.2 Hex Driver by hand

To order as a set as 'Impression Coping body + Guide Pin'
: [For 11mm Length] Product Code + S (ex: PITRH40S**S**)
[For 15mm Length] Product Code + S (ex: PITRH40L**S**)

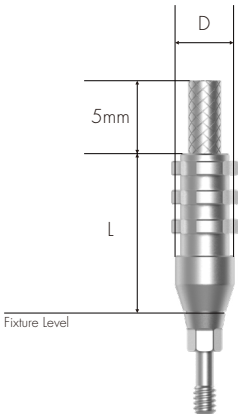

Mini

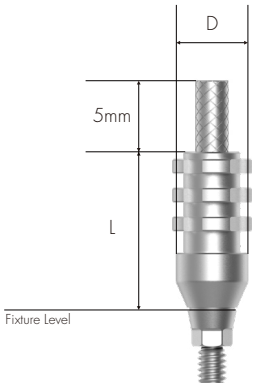

Regular & Wide

	L (mm)	11.0 Hex	11.0 Non-Hex	Guide Pin S
	D (mm)			
M	Ø4.0	PITMH40S	PITMN40S	PIGPTMS
M	Ø4.5	PITMH45S	PITMN45S	PIGPTMS
R/W	Ø4.0	PITRH40S	PITRN40S	PIGPTRS
R/W	Ø4.5	PITRH45S	PITRN45S	PIGPTRS
R/W	Ø5.0	PITRH50S	PITRN50S	PIGPTRS
R/W	Ø6.0	PITRH60S	PITRN60S	PIGPTRS
R/W	Ø7.0	PITRH70S	PITRN70S	PIGPTRS

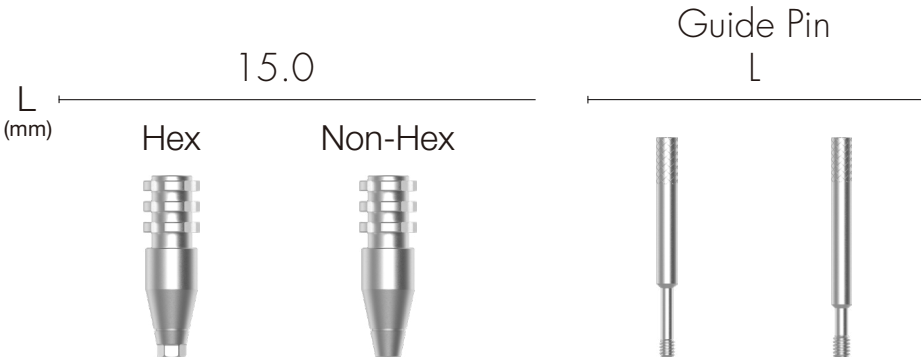

	D (mm)	Hex	Non-Hex	Guide Pin L
M	Ø4.0	PITMH40L	PITMN40L	PIGPTML
	Ø4.5	PITMH45L	PITMN45L	
R/W	Ø4.0	PITRH40L	PITRN40L	
	Ø4.5	PITRH45L	PITRN45L	
	Ø5.0	PITRH50L	PITRN50L	PIGPTRL
	Ø6.0	PITRH60L	PITRN60L	
	Ø7.0	PITRH70L	PITRN70L	

Transfer Impression Coping

Components for Fixture Level Impression
Closed Tray Type
Select specification fits for fixture connection
Streamlined Shape: Easy to transfer
Anti-Rotation Grooves accord with Hex of fixture
Material: Titanium alloy

Tighten with 1.2 Hex Driver by hand

To order as a set as 'Impression Coping body + Guide Pin'
: [For 9mm Length] Product Code + S (ex: TITRH40SS)
[For 13mm Length] Product Code + S (ex: TITRH40LS)

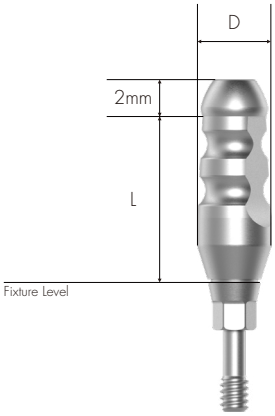

Mini

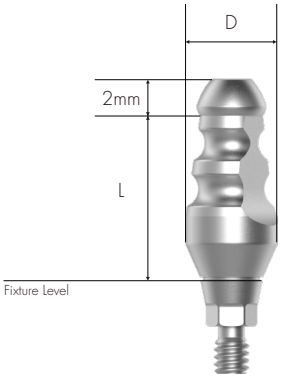

Regular & Wide

	L (mm)	9.0 Hex	9.0 Non-Hex	Guide Pin S
	D (mm)			
M	Ø4.0	TITMH40S	TITMN40S	TIGPTMS
M	Ø4.5	TITMH45S	TITMN45S	TIGPTMS
R/W	Ø4.0	TITRH40S	TITRN40S	TIGPTRS
R/W	Ø4.5	TITRH45S	TITRN45S	TIGPTRS
R/W	Ø5.0	TITRH50S	TITRN50S	TIGPTRS
R/W	Ø6.0	TITRH60S	TITRN60S	TIGPTRS
R/W	Ø7.0	TITRH70S	TITRN70S	TIGPTRS

	D (mm)	L (mm) 13.0 Hex	L (mm) 13.0 Non-Hex	Guide Pin L
				 
M	Ø4.0	TITMH40L	TITMN40L	TIGPTML
M	Ø4.5	TITMH45L	TITMN45L	
R/W	Ø4.0	TITRH40L	TITRN40L	
R/W	Ø4.5	TITRH45L	TITRN45L	
R/W	Ø5.0	TITRH50L	TITRN50L	TIGPTRL
R/W	Ø6.0	TITRH60L	TITRN60L	
R/W	Ø7.0	TITRH70L	TITRN70L	

Fixture Lab Analog

Lab Analog for Fixture Level Impression
Select between Fixture Diameter (Ø 3.5 / Ø 4.0 and above)
Material: Titanium alloy



M

D Ø3.75mm



FLATM350

R/W

D Ø4.25mm



FLATR400

Prosthetic Flow Chart II



Multi Temporary Cylinder

52 p



Multi CCM Cast Cylinder

52 p



Multi Plastic Cast Cylinder

53 p



Multi Ti Link Cylinder

53 p



Multi Lab Analog

55 p



Multi Pick-up Impression Coping

54 p



Multi Transfer Impression Coping

54 p



Multi Straight Abutment Driver

56 p



Multi Straight Abutment

49 p



Multi Angled Abutment

50 p



Multi Healing Cap

55 p



1.2 Hex Driver

140 p



Cover Screw

27 p



Healing Abutment

28 p



1.2 Hex Driver

140 p



ZENEX MULTI Fixture

24 p

Multi Straight Abutment

Abutment for manufacturing screw-retained prosthesis in Multiple Case
Same platform as Multi Angled Abutment
Move into internal oral part by using exclusive Multi Straight Abutment Carrier (Code: MSACR48)
Material: Titanium alloy

Tighten with exclusive Multi Straight Abutment Driver (Code: MSADSR20, Material: POM)
Recommended tightening torque: 30Ncm

To order as a set as 'Abutment + Carrier'
: Product Code + S (ex: MSATR4810S)

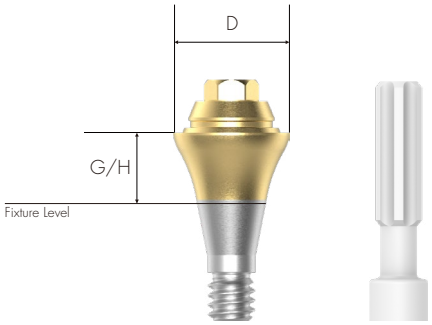

Mini

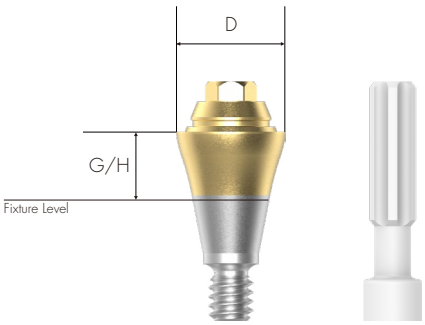

Regular & Wide

M
D Ø4.8mm

G/H (mm)

1.0	2.0	3.0	4.0	5.0
				
MSATM4810	MSATM4820	MSATM4830	MSATM4840	MSATM4850

R/W
D Ø4.8mm

G/H (mm)

1.0	2.0	3.0	4.0	5.0
				
MSATR4810	MSATR4820	MSATR4830	MSATR4840	MSATR4850

Multi Angled Abutment

Abutment for manufacturing screw-retained prosthesis in Multiple Case
Abutment of various angles (17°, 30°) for various angled of implant insertion path
Same platform as Multi Straight Abutment
Compensation of fixture placement angle up to 108°
Connect by using exclusive Multi Angled Abutment Carrier (Code: MAACRMC)
Material: Titanium alloy

Tighten with 1.2 Hex Driver
Recommended tightening torque: 30Ncm
Multi Angled Abutment Screw (MAASTM20 for Mini / MAASTR20 for Regular and Wide) included

To order as a set as 'Abutment + Screw + Carrier'
: Product Code + S (ex: MAATRH481725S)

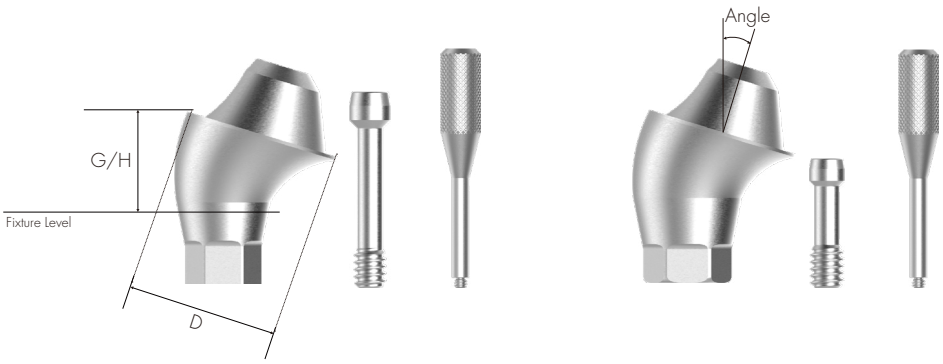

Mini　　Regular & Wide

M
D Ø4.8mm

G/H (mm)	2.5	3.0	4.0
Angle 17°	MAATMH481725	MAATMH481730	MAATMH481740

M
D Ø4.8mm

G/H (mm)	3.5	4.0	5.0
Angle 30°	MAATMH483035	MAATMH483040	MAATMH483050

R/W

D Ø4.8mm

G/H (mm)	2.5	3.0	4.0
Angle 17°			
	MAATRH481725	MAATRH481730	MAATRH481740

R/W

D Ø4.8mm

G/H (mm)	3.5	4.0	5.0
Angle 30°			
	MAATRH483035	MAATRH483040	MAATRH483050

Multi Temporary Cylinder

Multi Cylinder for making Combination-retained prosthesis from Multi Abutment
For manufacturing Screw-retained temporary Abutment
Material: Titanium alloy

Tighten with 1.2 Hex Driver
Recommended tightening torque: 20Ncm
Multi Cylinder Screw (MTCSR23) included

To order as a set as 'Cylinder + Multi Cylinder Screw'
: Product Code + S (ex: MTCSRN48S)

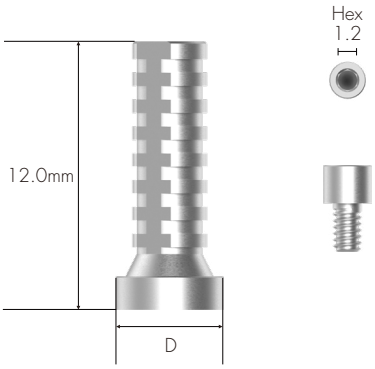

D ∅4.8mm

MTCSRN48

Multi CCM Cast Cylinder

Multi Cylinder for making Screw-retained prosthesis from Multi Abutment
Casting with non-precious alloy for manufacturing customized prosthesis
Melting point of CCM : 1,400 ~ 1,550°C
Material: Co-Cr-Mo alloy

Tighten with 1.2 Hex Driver
Recommended tightening torque: 20Ncm
Multi Cylinder Screw (MTCSR23, Material: Titanium alloy) included

To order as a set as 'Cylinder + Multi Cylinder Screw'
: Product Code + S (ex: MCCCSRN48S)

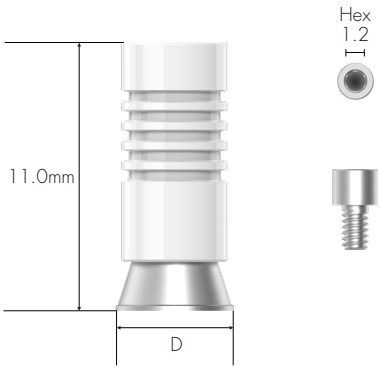

D ∅4.8mm

MCCCSRN48

Multi Plastic Cast Cylinder

Multi Cylinder for making Screw-retained prosthesis from Multi Abutment
Material: POM

Tighten with 1.2 Hex Driver
Recommended tightening torque: 20Ncm
Multi Cylinder Screw (MTCSR23, Material: Titanium alloy) included

To order as a set as 'Cylinder + Multi Cylinder Screw'
: Product Code + S (ex: MPCCSRN48S)

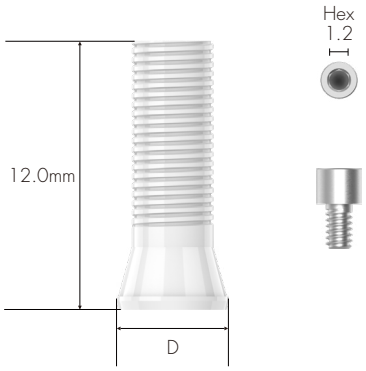

D Ø5.0mm

MPCCSRN48

Multi Ti Link Cylinder

Multi Cylinder for making Combination-retained prosthesis from Multi Abutment
Use when producing Customized Abutment (Titanium & Zirconia) and Crown by CAD/CAM equipment
Use exclusive implant library of ZENEX MULTI Implant System
Abutment Level Impression
Material: Titanium alloy

Tighten with 1.2 Hex Driver
Recommended tightening torque: 20Ncm
Multi Cylinder Screw (MTCSR23) included

To order as a set as 'Cylinder + Multi Cylinder Screw'
: Product Code + S (ex: MTLCSRN48S)

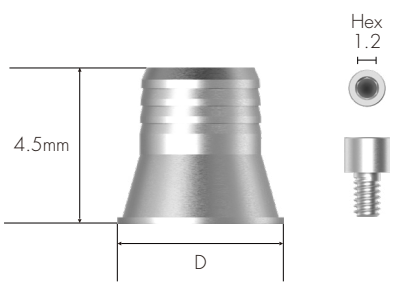

D Ø4.8mm

MTLCSRN48

Multi Pick-up Impression Coping

Components for taking Abutment Level impression for Multi Abutment
Open Tray Type
Material: Titanium alloy

Tighten with 1.2 Hex Driver by hand
Multi Pick-up Impression Coping Guide Pin (MPICSRGP) included

To order as a set as 'Impression Coping body + Guide Pin'
: Product Code + S (ex: MPICSR48S)

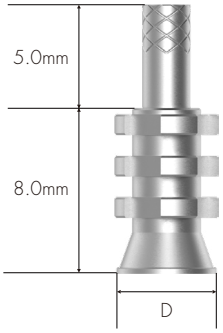

D ∅4.8mm

MPICSR48

Multi Transfer Impression Coping

Components for taking Abutment Level impression for Multi Abutment
Closed Tray Type
Material: Titanium alloy

Tighten with 1.2 Hex Driver by hand

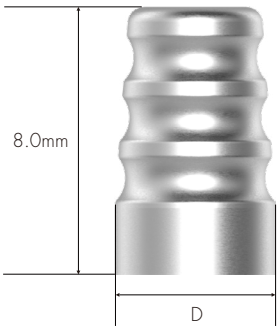

D ∅4.8mm

MTICSR48

Multi Lab Analog

Lab Analog for Multi Abutment
Material: Titanium alloy



MLASR48

Multi Healing Cap

Protect Cap for Multi Abutment
Material: Titanium alloy

Tighten with 1.2 Hex Driver by hand



D ∅4.8mm

MHCSR48

Multi ScanBody

ScanBody for Multi Abutment

ScanBody for manufacturing customized Titanium abutment
Use for Oral scan (Model scan available as well)
Material: Titanium alloy

Tighten with 1.2 Hex Driver by hand

To order as a set as 'ScanBody + ScanBody Screw'
: Product Code + S (ex: MSBSR4809S)

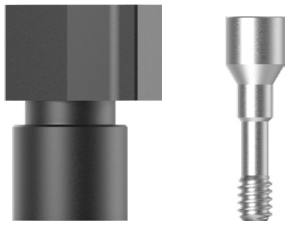

MSBSR4809

Multi Straight Abutment Driver

Torque driver for Multi Straight Abutment
Material: Stainless Steel (TrimRite®)



MSADSR20

IZEN
IMPLANT

Prosthetic Flow Chart III





65 p



65 p



Kerator Lab Analog

67 p



Kerator Impression Coping

67 p



66 p



60 p



60 p



Ball Abutment Lab Analog

61 p



Ball Abutment Driver

62 p



Ball Abutment

59 p



Kerator Torque Tip

66 p



Kerator Abutment

63 p



Kerator Angled Abutment

64 p



1.2 Hex Driver

140 p



Cover Screw

27 p



Healing Abutment

28 p



1.2 Hex Driver

140 p



ZENEX MULTI Fixture

24 p

Ball Abutment

Abutment for overdenture using O-ring attachment
Compensation of mounting angle up to 20°
Material: Titanium alloy

Tighten with exclusive Ball Abutment Driver (Code: BAD24)
Recommended tightening torque: 30Ncm

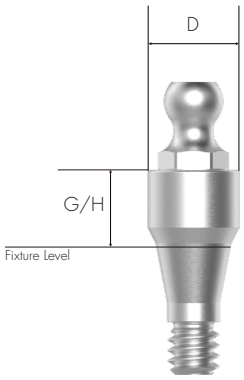

Mini

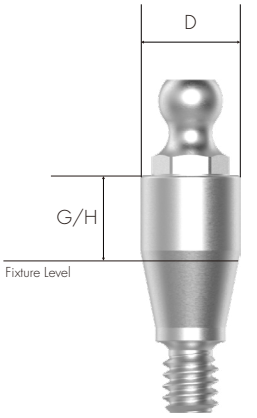

Regular & Wide

M
D Ø3.5mm

G/H (mm)

1.0	2.0	3.0	4.0	5.0	6.0
BATM3510	BATM3520	BATM3530	BATM3540	BATM3550	BATM3560

R/W
D Ø3.5mm

G/H (mm)

1.0	2.0	3.0	4.0	5.0	6.0
BATR3510	BATR3520	BATR3530	BATR3540	BATR3550	BATR3560

Ball Abutment Cap Set

O-ring attachment for Ball Abutment
Replace O-ring on Ball Abutment Cap
Packing Unit: Ball Abutment Cap (Material: Titanium alloy)+Ball Abutment Lab O-ring (Material: Silicone)

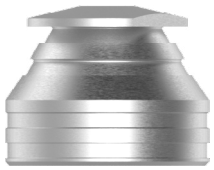

BASRCS

Ball Abutment Retainer Set

Use in case lack of vertical diameter comparing to Ball Abutment Retainer
Packing Unit: Ball Abutment Retainer (Material: Titanium alloy)+Ball Abutment Lab O-ring (Material: Silicone)

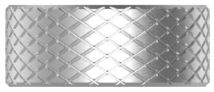

BASRRS

Ball Abutment O-ring Set

O-ring set
Packing Unit: Ball Abutment O-ring 5 EA
Material: Silicone



BASROS

Ball Abutment Lab Analog

Lab Analog for Ball Abutment
Material: Titanium alloy



BAALA

Ball Abutment Driver

Torque driver for Ball Abutment
Material: Stainless Steel (TrimRite®)+Titanium alloy+Silicone



BAD24

Kerator Abutment

Compensation of fixture placement angle up to 40°
1.5mm lower vertical dimension
Composition of multiple attachments with stable retention

Connect with exclusive driver
Recommended tightening torque: 30Ncm

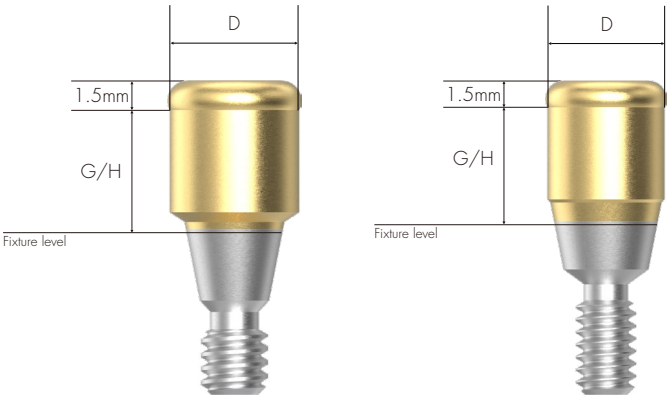

Mini

Regular & Wide

M
D Ø3.7mm

G/H (mm)

1.0	2.0	3.0	4.0	5.0	6.0
G351	G352	G353	G354	G355	G356

R/W
D Ø3.7mm

G/H (mm)

1.0	2.0	3.0	4.0	5.0	6.0
G401	G402	G403	G404	G405	G406

Kerator Angled Abutment

1.5mm lower vertical dimension
Composition of multiple attachments with stable retention

Connect with 1.2 Hex driver
Recommended tightening torque: 30Ncm

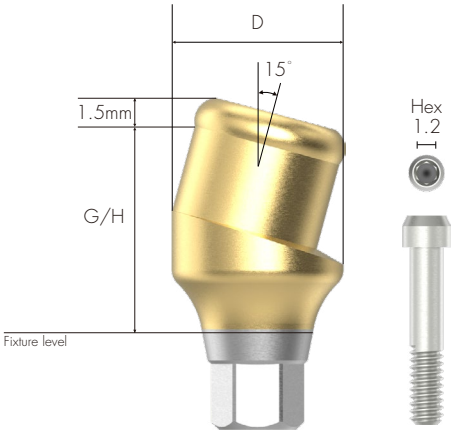

Mini

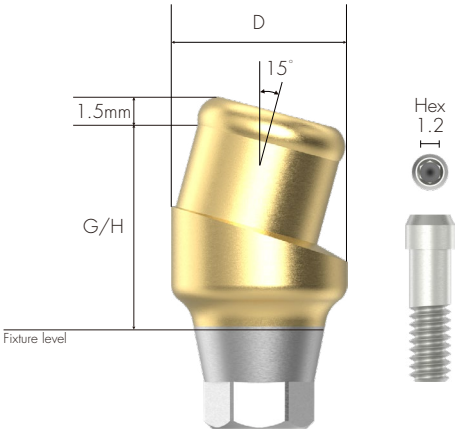

Regular & Wide

M
D ∅3.7mm

G/H (mm) — 1.5 — 3.0



G35AN1.5



G35AN3.0

R/W
D ∅3.7mm

G/H (mm) — 1.5 — 3.0



G4AN1.5



G4AN3.0

Kerator CDPH Set

Composition: White spacer / denture cap connected black processing male & Replacement male (Red, Blue & Pink)
Select replacement male of adequate retention to use according to cases
Replace replacement male by using Kerator Magic tool



CDPH SET

Kerator Male Cap

Retention power of KERATOR male cap is down (up to 20%) and red cap(angle) is included in the male package
Colors of cap determine retention power and it minimizes Denture Repair even there is any continuous bone loss

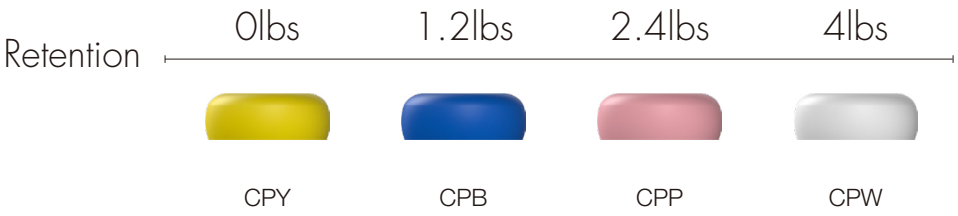



Kerator Magic Tool

Use to connect and remove replacement male on denture cap
As separated into two pieces, it is easy for maintenance



KMH002

Kerator Torque Tip

Torque driver for Kerator Abutment

Round Type



KMD719

Kerator Impression Coping

Pick-up Impression Coping for Kerator abutment
Closed Tray Type



DKI4845

Kerator Lab Analog

Lab Analog for Kerator Abutment



DKA3854

Prosthetic Flow Chart IV

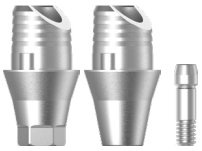

Ti Link Abutment

70 p



Ti Blank Abutment

71 p



Fixture Lab Analog

47 p



Pick-up Impression Coping

43 p



Transfer Impression Coping

45 p



Cover Screw

27 p



Healing Abutment

28 p



1.2 Hex Driver

140 p



ZENEX MULTI Fixture

24 p

ScanBody

ScanBody for manufacturing customized Titanium abutment
Use for Oral scan (Model scan available as well)
Material: Titanium alloy

Tighten with 1.2 Hex Driver by hand

To order as a set as 'ScanBody + ScanBody Screw'
: Product Code + S (ex: TSBR4310S)

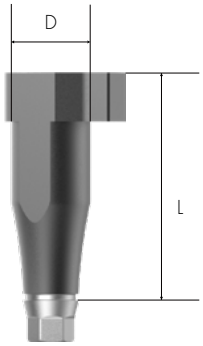

M
D ∅4.0mm
L 14.0mm



TSBM4014

R/W
D ∅4.3mm
L 10.0mm



TSBR4310

Ti Link Abutment

Abutment for manufacturing Cement/Combination-retained type prosthesis
For manufacturing custom abutment (Titanium & Zirconia) and crown by CAD/CAM equipment
Select specification fits for fixture Connection
Use exclusive library for ZENEX MULTI Implant system
Fixture Level Impression
Material: Titanium alloy

Tighten with 1.2 Hex Driver
Recommended tightening torque: 30Ncm

To order as a set as 'Abutment + Screw'
: Product Code + S (ex: TLATRH4510S)

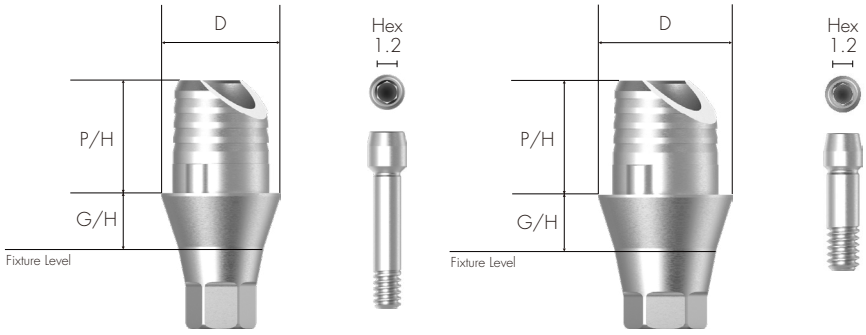

Mini

Regular & Wide

M
D Ø4.0mm

G/H (mm)	1.0	2.0
P/H (mm)	3.8	



Hex	Non-Hex	Hex	Non-Hex
TLATMH4010	TLATMN4010	TLATMH4020	TLATMN4020

R/W
D Ø4.5mm

G/H (mm)	1.0	2.0
P/H (mm)	3.8	



Hex	Non-Hex	Hex	Non-Hex
TLATRH4510	TLATRN4510	TLATRH4520	TLATRN4520

Ti Blank Abutment

Manufacturing customized abutment with milling machine
Select specification fits for fixture Connection
Digital Impression
Material: Titanium alloy

Tighten with 1.2 Hex Driver
Recommended tightening torque: 30Ncm
Product line-up applied for various milling machine brands
(Milling machine manufacturer: Arum(Doowon), Manix, Vatech, RND)

To order as a set as 'Abutment + Screw'
: Product Code + S (ex: TBATRH10A**S**)

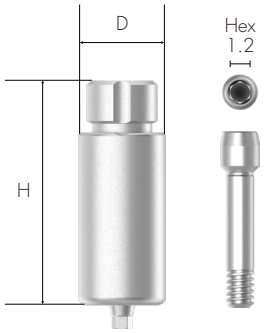

Mini

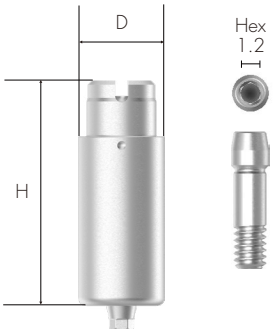

Regular & Wide

For Arum

M

D ∅10.0mm

H (mm) — 20



Hex

TBATMH10A



Non-Hex

TBATMN10A

R/W

D ∅10.0mm

H (mm) — 20



Hex

TBATRH10A



Non-Hex

TBATRN10A

For Manix

M

D ∅10.0mm

H (mm) | 20



Hex: TBATMH10M



Non-Hex: TBATMN10M

R/W

D ∅10.0mm

H (mm) | 20



Hex: TBATRH10M



Non-Hex: TBATRN10M

ZENEX PLUS
T-System

ZENEX PLUS T-System

COMPOSITION

078 ZENEX PLUS T-System Fixture
081 Cover Screw
082 Healing Abutment
084 Prosthetic Flow Chart I
085 Temporary Abutment
086 Cemented Abutment
091 Angled Abutment
094 FreeMilling Abutment
096 CCM Cast Abutment
097 Pick-up Impression Coping
099 Transfer Impression Coping
101 Fixture Lab Analog
102 Prosthetic Flow Chart II
103 Multi Straight Abutment
104 Multi Angled Abutment
106 Components of Multi Abutment
112 Prosthetic Flow Chart III
113 Ball Abutment
114 Components of Ball Abutment
117 Kerator Abutment
118 Kerator Angled Abutment
119 Components of Kerator Abutment
122 Prosthetic Flow Chart IV
123 ScanBody
124 Ti Link Abutment
125 Ti Blank Abutment

ZENEX PLUS T-System

- Design features

- Designed for various types of bone

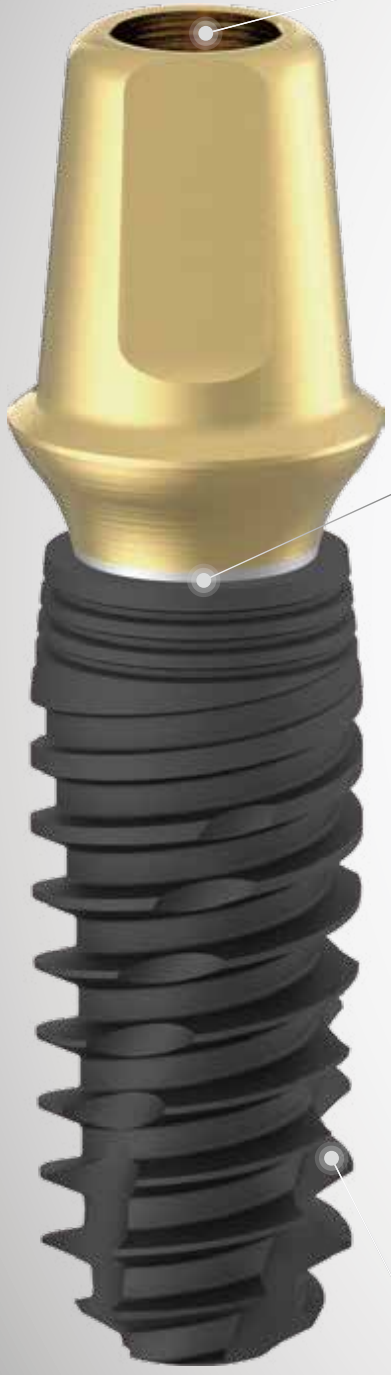

Post shape (Rounded top) optimized for digital dentistry system
Wide cross-section to prevent crown rotation and secure accurate placement.
Wide marginal area to prevent crown fracture
Small screw guide hole to secure strength of abutment
Optimized abutment screw for Short Fixture



Deep hex hole to prevent abutment rotation



Platform Switching
Prevents crestal bone loss after implant placement
and provides esthetic result

Deep screw hole to secure initial stability on weak bone
Reversed taper design on upper part to minimize stress on
bone at implant placement
Micro Groove design to minimize bone loss and appreciate esthetic of prosthesis
1.0 Pitch double thread helps to reduce time for implant placement

ZENEX PLUS Implant
- Surface features

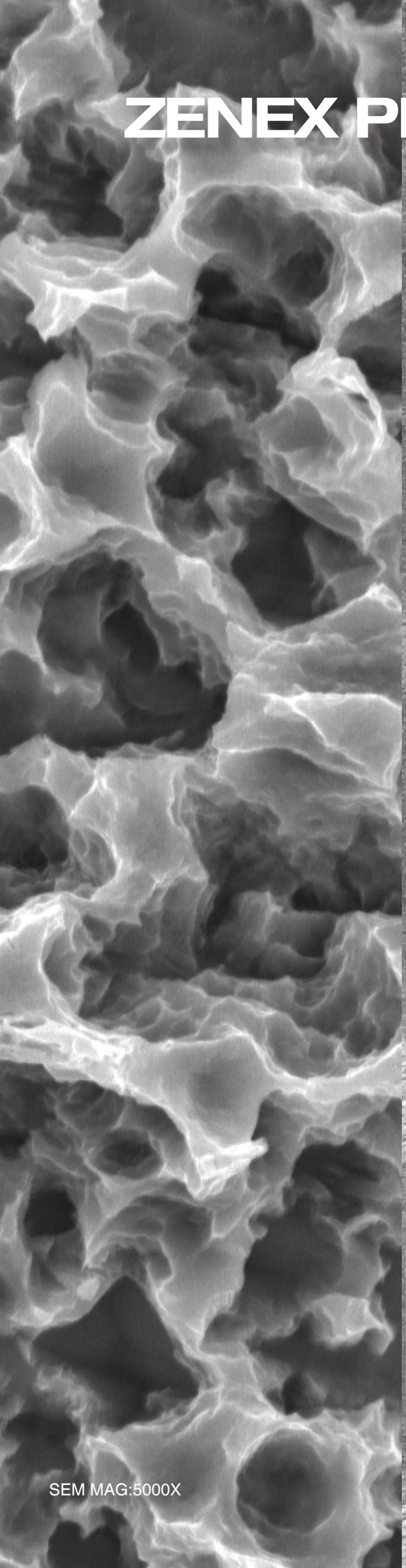

SEM MAG:5000X

SEM MAG:30X

SLA surface
($Al_2 O_3$ powder Sand-blast and Acid Etched)

- SLA surface for presenting ideal surface shape
- Surface Roughness Ra 2.0~3.0㎛

- Safe surface with no residual acid
- Safer than other implants (Proved by ICP/IC Analysis)

ZENEX PLUS Fixture T - System

Reversed taper design on upper part to minimize stress on bone when an implant is placed.
SLA surface implant
Micro Groove design to minimize bone loss and appreciate esthetic of prosthesis
Deep screw hole to secure initial stability on weak bone
Recommended torque for implant placement: Less than 30~45Ncm
Material: Titanium

* Recommend to use fixture bigger than Ø4.5 mm for single case in posterior area

To order as a set as 'Fixture + Cover Screw'
: Product Code + S (ex: ZPTM3508S)

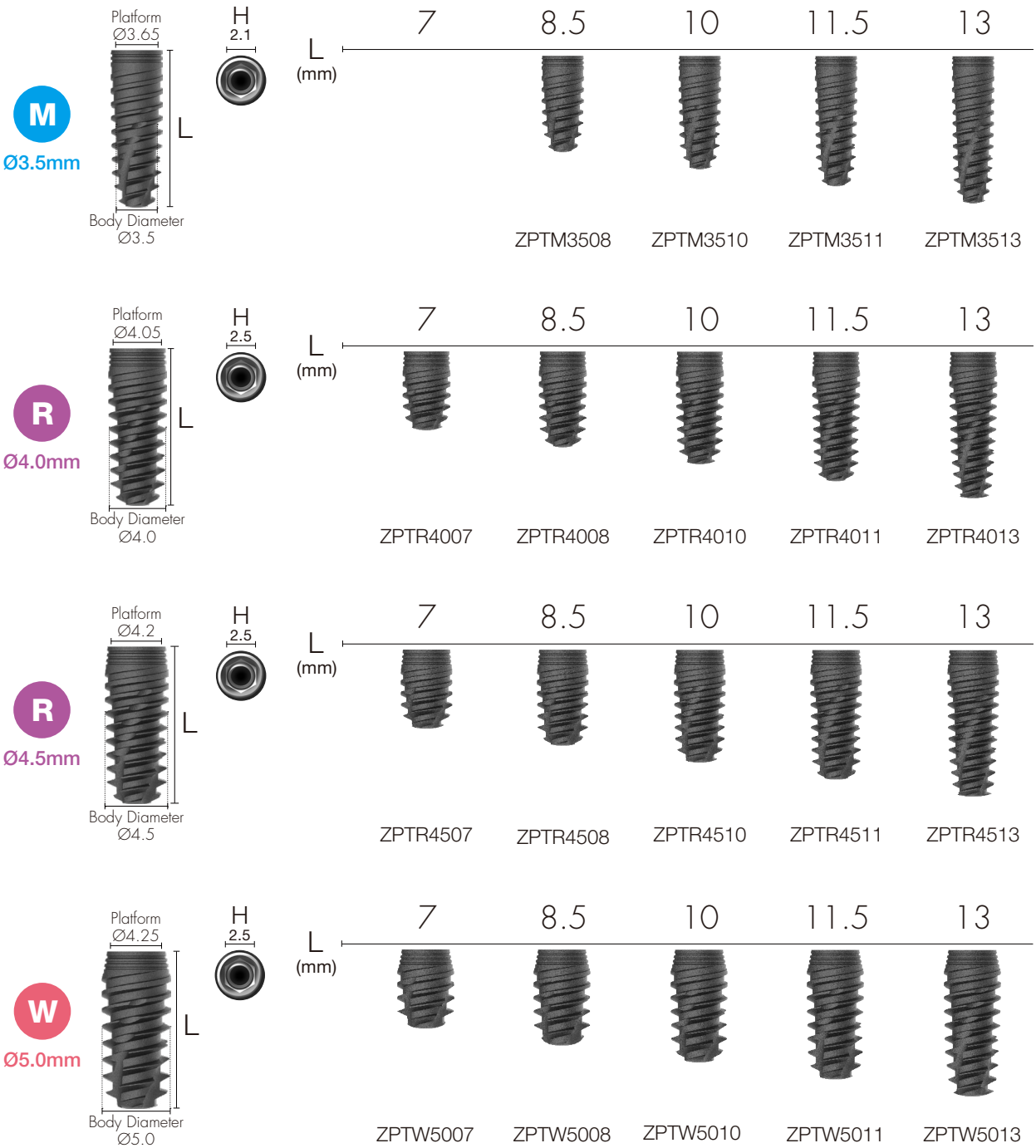

Nominal diameter may differ from actual diameter

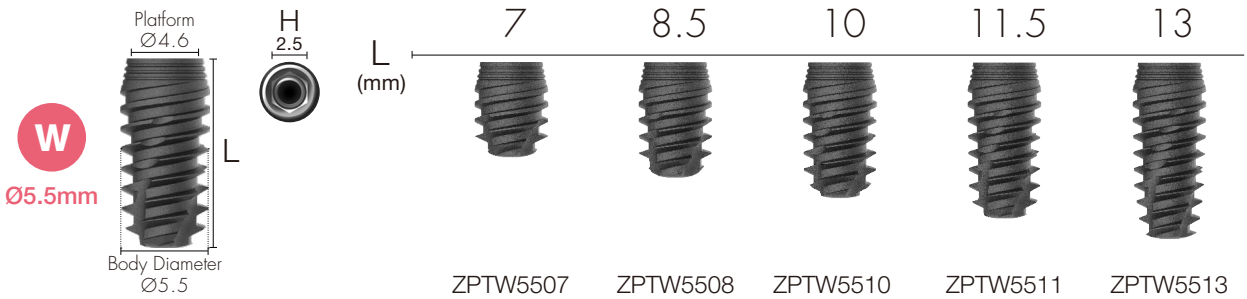

Nominal diameter may differ from actual diameter

Special Options

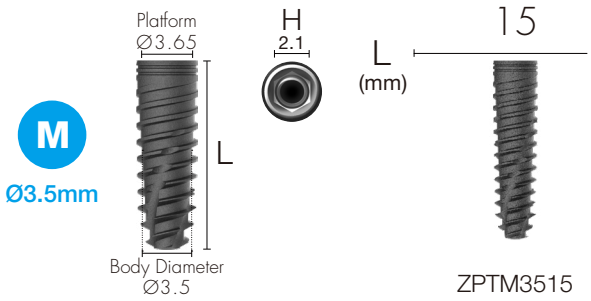

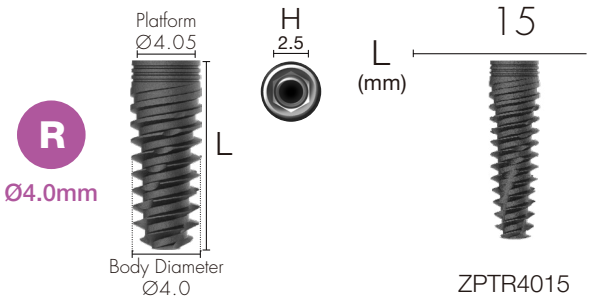

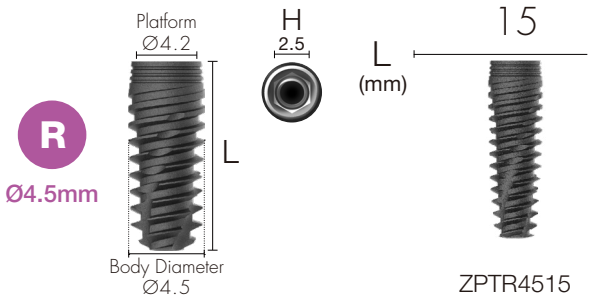

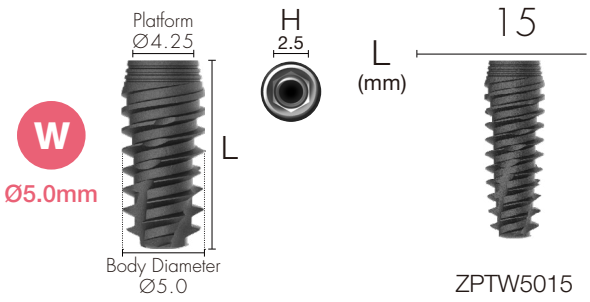

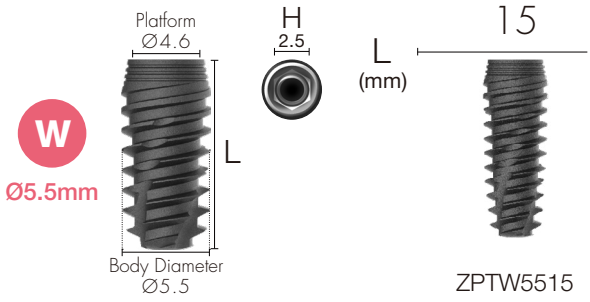

Nominal diameter may differ from actual diameter

Cover Screw

Select appropriate fixture height upon depth of implant placement.
Select specification fits for fixture connection.
Material: Titanium alloy

Tighten with 1.2 Hex Driver by hand.
Recommended tightening torque: 5~8Ncm

H (mm)

	0.4	1.4	2.0
M	 CSTM35S	 CSTM35M	 CSTM35L
R/W	 CSTR40S	 CSTR40M	 CSTR40L

Healing Abutment

Use Healing Abutment fits for the diameter of abutment.
Use specification fits for fixture connection.
Material: Titanium alloy

Tighten with 1.2 Hex Driver by hand.
Recommended tightening torque: 5~8Ncm

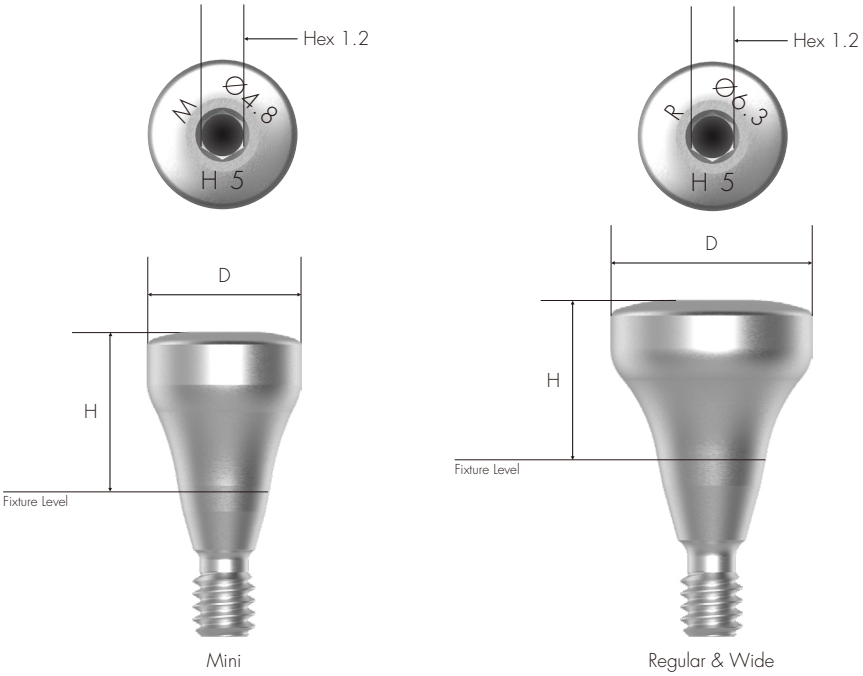

M

H (mm)	3.0	4.0	5.0	7.0	9.0
D (mm)					
Ø4.3	HATM403	HATM404	HATM405	HATM407	HATM409
Ø4.8	HATM453	HATM454	HATM455	HATM457	HATM459

R/W

D (mm) \ H (mm)	3.0	4.0	5.0	7.0	9.0
					
∅4.3	HATR403	HATR404	HATR405	HATR407	HATR409
∅4.8	HATR453	HATR454	HATR455	HATR457	HATR459
∅5.3	HATR503	HATR504	HATR505	HATR507	HATR509
∅6.3	HATR603	HATR604	HATR605	HATR607	HATR609
∅7.3	HATR703	HATR704	HATR705	HATR707	HATR709
∅8.3	HATR803	HATR804	HATR805		

Prosthetic Flow Chart I



Temporary Abutment

85 p

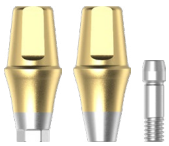

Cemented Abutment

86 p

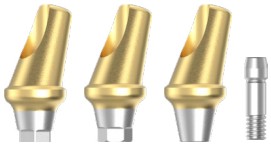

Angled Abutment

91 p



FreeMilling Abutment

94 p



CCM Cast Abutment

96 p



Fixture Lab Analog

101 p



Pick-up Impression Coping

97 p



Transfer Impression Coping

99 p



Cover Screw

81 p



Healing Abutment

82 p



1.2 Hex Driver

140 p



ZENEX PLUS Fixture

78 p

Temporary Abutment

Abutment for manufacturing Screw-retained type temporary prosthesis
Select specification fits for fixture connection.
Fixture Level Impression
Material: Titanium alloy

Tighten with 1.2 Hex Driver.
Recommended tightening torque: 20Ncm

To order as a set as 'Abutment + Abutment Screw'
: Product Code + S (ex: TATRH4510S)

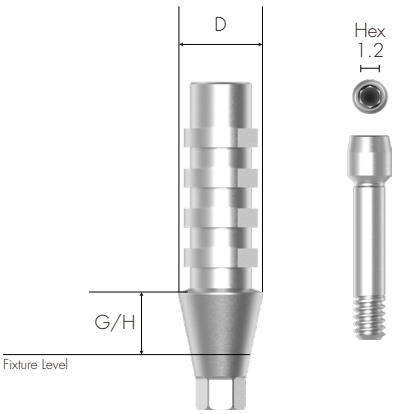

Mini

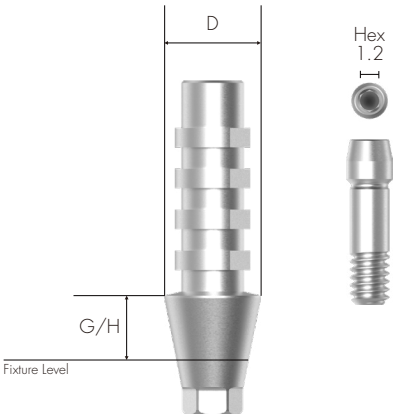

Regular & Wide

M
D Ø4.0mm

G/H (mm)

1.0		3.0	
			
Hex	Non-Hex	Hex	Non-Hex
TATMH4010	TATMN4010	TATMH4030	TATMN4030

R/W
D Ø4.5mm

G/H (mm)

1.0		3.0	
			
Hex	Non-Hex	Hex	Non-Hex
TATRH4510	TATRN4510	TATRH4530	TATRN4530

Cemented Abutment

Abutment for manufacturing Cement/Combination-retained type prosthesis
Select specification fits for fixture connection.
Customized by grinding (At least 3.0mm of Abutment Length above Fixture Platform needs to be maintained)
Fixture Level Impression
Material: Titanium alloy

Tighten with 1.2 Hex Driver.
Recommended tightening torque: 30Ncm

To order as a set as 'Abutment + Abutment Screw'
: Product Code + S (ex: CATRH45105S)

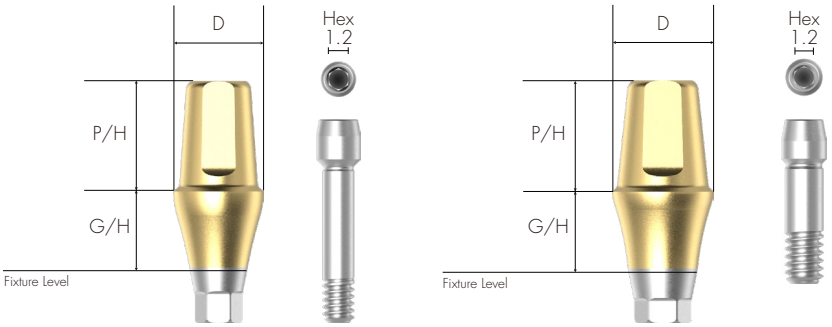

M
D Ø4.0mm

	G/H (mm)	1.0	2.0	3.0	4.0
					
	P/H (mm)				
Hex	5.5	CATMH40105	CATMH40205	CATMH40305	CATMH40405
Hex	7.0	CATMH40107	CATMH40207	CATMH40307	CATMH40407
Non-Hex	5.5	CATMN40105	CATMN40205	CATMN40305	CATMN40405
Non-Hex	7.0	CATMN40107	CATMN40207	CATMN40307	CATMN40407

M
D Ø4.0mm

	G/H (mm)	5.0	6.0	7.0
				
	P/H (mm)			
Hex	5.5	CATMH40505	CATMH40605	CATMH40705
Hex	7.0	CATMH40507	CATMH40607	CATMH40707
Non-Hex	5.5	CATMN40505	CATMN40605	CATMN40705
Non-Hex	7.0	CATMN40507	CATMN40607	CATMN40707

M

D Ø4.5mm

	G/H (mm)	1.0	2.0	3.0	4.0
					
	P/H (mm)				
Hex	5.5	CATMH45105	CATMH45205	CATMH45305	CATMH45405
	7.0	CATMH45107	CATMH45207	CATMH45307	CATMH45407
Non-Hex	5.5	CATMN45105	CATMN45205	CATMN45305	CATMN45405
	7.0	CATMN45107	CATMN45207	CATMN45307	CATMN45407

M

D Ø4.5mm

	G/H (mm)	5.0	6.0	7.0
				
	P/H (mm)			
Hex	5.5	CATMH45505	CATMH45605	CATMH45705
	7.0	CATMH45507	CATMH45607	CATMH45707
Non-Hex	5.5	CATMN45505	CATMN45605	CATMN45705
	7.0	CATMN45507	CATMN45607	CATMN45707

R/W

D Ø4.5mm

	G/H (mm)	1.0	2.0	3.0	4.0
					
	P/H (mm)				
Hex	5.5	CATRH45105	CATRH45205	CATRH45305	CATRH45405
	7.0	CATRH45107	CATRH45207	CATRH45307	CATRH45407
Non-Hex	5.5	CATRN45105	CATRN45205	CATRN45305	CATRN45405
	7.0	CATRN45107	CATRN45207	CATRN45307	CATRN45407

R/W

D Ø4.5mm

	G/H (mm)	5.0	6.0	7.0
				
	P/H (mm)			
Hex	5.5	CATRH45505	CATRH45605	CATRH45705
	7.0	CATRH45507	CATRH45607	CATRH45707
Non-Hex	5.5	CATRN45505	CATRN45605	CATRN45705
	7.0	CATRN45507	CATRN45607	CATRN45707

R/W

D Ø5.0mm

	G/H (mm)	1.0	2.0	3.0	4.0
					
	P/H (mm)				
Hex	4.0	CATRH50104	CATRH50204	CATRH50304	CATRH50404
	5.5	CATRH50105	CATRH50205	CATRH50305	CATRH50405
	7.0	CATRH50107	CATRH50207	CATRH50307	CATRH50407
Non-Hex	4.0	CATRN50104	CATRN50204	CATRN50304	CATRN50404
	5.5	CATRN50105	CATRN50205	CATRN50305	CATRN50405
	7.0	CATRN50107	CATRN50207	CATRN50307	CATRN50407

R/W

D Ø5.0mm

	G/H (mm)	5.0	6.0	7.0
				
	P/H (mm)			
Hex	4.0	CATRH50504	CATRH50604	CATRH50704
	5.5	CATRH50505	CATRH50605	CATRH50705
	7.0	CATRH50507	CATRH50607	CATRH50707
Non-Hex	4.0	CATRN50504	CATRN50604	CATRN50704
	5.5	CATRN50505	CATRN50605	CATRN50705
	7.0	CATRN50507	CATRN50607	CATRN50707

R/W

D Ø6.0mm

	G/H (mm)	1.0	2.0	3.0	4.0
	P/H (mm)				
Hex	4.0	CATRH60104	CATRH60204	CATRH60304	CATRH60404
	5.5	CATRH60105	CATRH60205	CATRH60305	CATRH60405
	7.0	CATRH60107	CATRH60207	CATRH60307	CATRH60407
Non-Hex	4.0	CATRN60104	CATRN60204	CATRN60304	CATRN60404
	5.5	CATRN60105	CATRN60205	CATRN60305	CATRN60405
	7.0	CATRN60107	CATRN60207	CATRN60307	CATRN60407

R/W

D Ø6.0mm

	G/H (mm)	5.0	6.0	7.0
	P/H (mm)			
Hex	4.0	CATRH60504	CATRH60604	CATRH60704
	5.5	CATRH60505	CATRH60605	CATRH60705
	7.0	CATRH60507	CATRH60607	CATRH60707
Non-Hex	4.0	CATRN60504	CATRN60604	CATRN60704
	5.5	CATRN60505	CATRN60605	CATRN60705
	7.0	CATRN60507	CATRN60607	CATRN60707

R/W

D Ø7.0mm

	G/H (mm)	1.0	2.0	3.0	4.0
	P/H (mm)				
Hex	4.0	CATRH70104	CATRH70204	CATRH70304	CATRH70404
	5.5	CATRH70105	CATRH70205	CATRH70305	CATRH70405
Non-Hex	4.0	CATRN70104	CATRN70204	CATRN70304	CATRN70404
	5.5	CATRN70105	CATRN70205	CATRN70305	CATRN70405

R/W

D Ø7.0mm

	G/H (mm)	5.0	6.0	7.0
				
	P/H (mm)			
Hex	4.0	CATRH70504	CATRH70604	CATRH70704
	5.5	CATRH70505	CATRH70605	CATRH70705
Non-Hex	4.0	CATRN70504	CATRN70604	CATRN70704
	5.5	CATRN70505	CATRN70605	CATRN70705

Angled Abutment

Abutment for manufacturing Cement/Combination-retained type prosthesis
Select specification fits for fixture connection.
Fixture Level Impression
Can be positioned in 12 directions by selecting A or B type
Material: Titanium alloy

Tighten with 1.2 Hex Driver.
Recommended tightening torque: 30Ncm

To order as a set as 'Abutment + Abutment Screw'
: Product Code + S (ex: AATRA45172S)

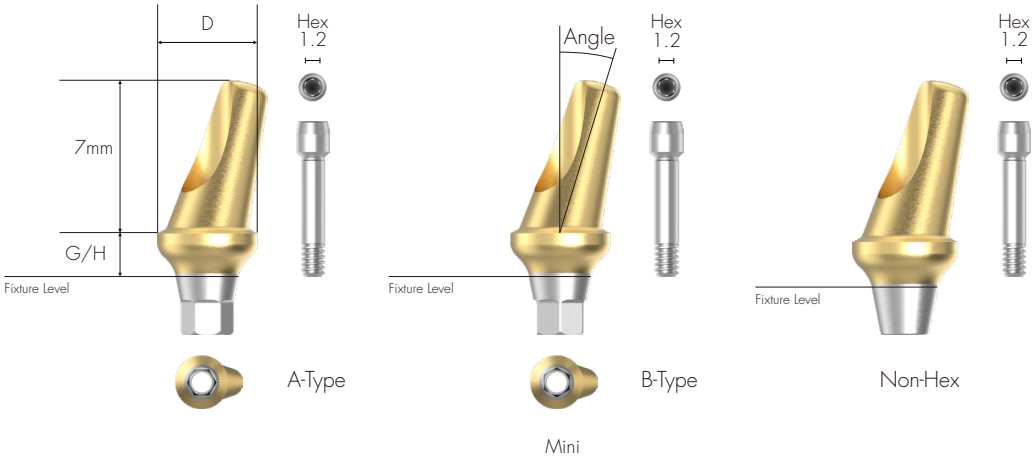

M
D Ø4.0mm

G/H (mm)	2.0	4.0
Angle 17°		
A-Type	AATMA40172	AATMA40174
B-Type	AATMB40172	AATMB40174
Non-Hex	AATMN40172	AATMN40174

M
D Ø4.5mm

G/H (mm)	2.0	4.0
Angle 17°		
A-Type	AATMA45172	AATMA45174
B-Type	AATMB45172	AATMB45174
Non-Hex	AATMN45172	AATMN45174

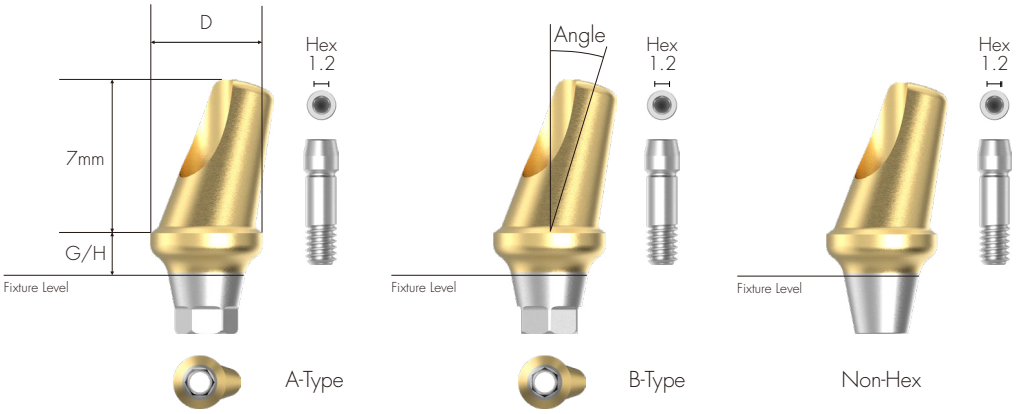

Regular & Wide

R/W

D Ø4.5mm

G/H (mm)	2.0	4.0
Angle 17°		
A-Type	AATRA45172	AATRA45174
B-Type	AATRB45172	AATRB45174
Non-Hex	AATRN45172	AATRN45174

R/W

D Ø5.0mm

G/H (mm)	2.0	4.0
Angle 17°		
A-Type	AATRA50172	AATRA50174
B-Type	AATRB50172	AATRB50174
Non-Hex	AATRN50172	AATRN50174

R/W

D Ø6.0mm

G/H (mm)	2.0	4.0
Angle 17°		
A-Type	AATRA60172	AATRA60174
B-Type	AATRB60172	AATRB60174
Non-Hex	AATRN60172	AATRN60174

FreeMilling Abutment

Abutment for manufacturing Cement/Combination-retained type prosthesis
Used when creating free marginal space for Abutment
Select specification fits for fixture Connection
Customized by grinding (At least 3.0mm of Abutment Length above Fixture Platform needs to be maintained)
Fixture Level Impression
Material: Titanium alloy

Tighten with 1.2 Hex Driver
Recommended tightening torque: 30Ncm

To order as a set as 'Abutment + Abutment Screw'
: Product Code + S (ex: FMATRH40159S)

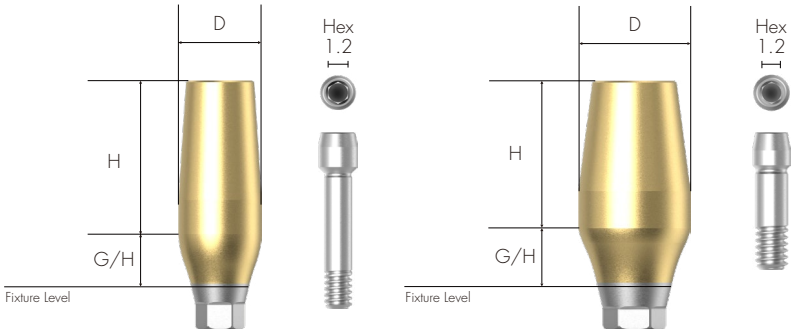

M
D Ø4.0mm
H 9.0mm

G/H (mm)

1.5		3.0	
			
Hex	Non-Hex	Hex	Non-Hex
FMATMH40159	FMATMN40159	FMATMH40309	FMATMN40309

R/W
D Ø4.0mm
H 9.0mm

G/H (mm)

1.5		3.0	
			
Hex	Non-Hex	Hex	Non-Hex
FMATRH40159	FMATRN40159	FMATRH40309	FMATRN40309

R/W

D Ø5.0mm
H 8.0mm

G/H (mm)

1.5		3.0	
			
Hex	Non-Hex	Hex	Non-Hex
FMATRH50158	FMATRN50158	FMATRH50308	FMATRN50308

R/W

D Ø6.0mm
H 8.0mm

G/H (mm)

1.5		3.0	
			
Hex	Non-Hex	Hex	Non-Hex
FMATRH60158	FMATRN60158	FMATRH60308	FMATRN60308

R/W

D Ø7.0mm
H 8.0mm

G/H (mm)

1.5		3.0	
			
Hex	Non-Hex	Hex	Non-Hex
FMATRH70158	FMATRN70158	FMATRH70308	FMATRN70308

CCM Cast Abutment

Abutment for manufacturing customized abutment in difficult and complicated cases
Select specification fits for fixture connection
Fixture Level Impression
Casting with non-precious alloy for manufacturing customized prosthesis
Melting point of CCM : 1,400 ~ 1,550°C
Material: Co-Cr-Mo alloy

Tighten with 1.2 Hex Driver.
Recommended tightening torque: 30Ncm

To order as a set as 'Abutment + Abutment Screw'
: Product Code + S (ex: CCATRH4510S)

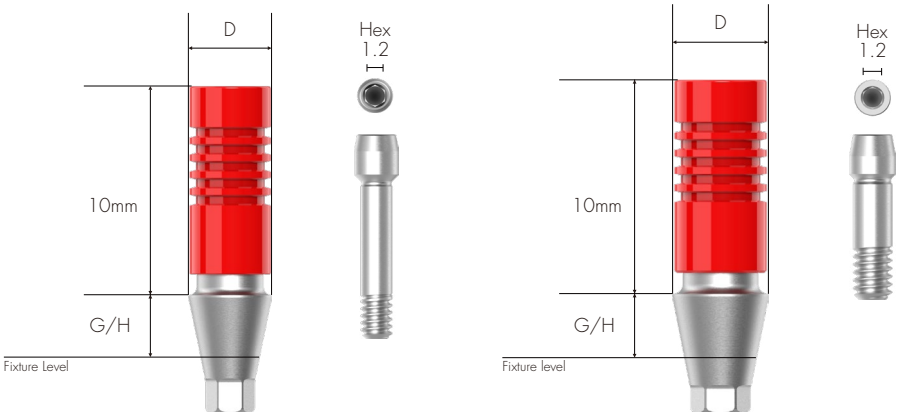

Mini | Regular & Wide

M
D Ø4.0mm

G/H (mm)

1.0		3.0	
			
Hex	Non-Hex	Hex	Non-Hex
CCATMH4010	CCATMN4010	CCATMH4030	CCATMN4030

R/W
D Ø4.5mm

G/H (mm)

1.0		3.0	
			
Hex	Non-Hex	Hex	Non-Hex
CCATRH4510	CCATRN4510	CCATRH4530	CCATRN4530

Pick-up Impression Coping

Components for Fixture Level Impression
Open Tray Type
Select specification fits for fixture connection
Enables accurate impression with design of stably fixed in impression material
Material: Titanium alloy

Tighten with 1.2 Hex Driver by hand

To order as a set as 'Impression Coping body + Guide Pin'
: [For 11mm Length] Product Code + S (ex: PITRH40S**S**)
[For 15mm Length] Product Code + S (ex: PITRH40L**S**)

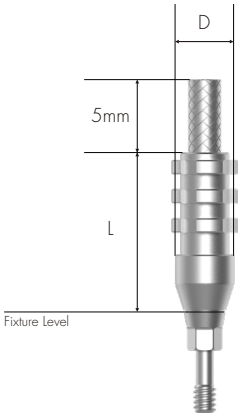

Mini

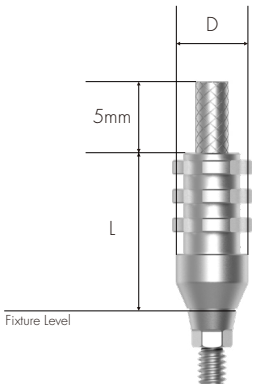

Regular & Wide

	L (mm)	11.0 Hex	11.0 Non-Hex	Guide Pin S
	D (mm)			
M	Ø4.0	PITMH40S	PITMN40S	PIGPTMS
M	Ø4.5	PITMH45S	PITMN45S	PIGPTMS
R/W	Ø4.0	PITRH40S	PITRN40S	PIGPTRS
R/W	Ø4.5	PITRH45S	PITRN45S	PIGPTRS
R/W	Ø5.0	PITRH50S	PITRN50S	PIGPTRS
R/W	Ø6.0	PITRH60S	PITRN60S	PIGPTRS
R/W	Ø7.0	PITRH70S	PITRN70S	PIGPTRS

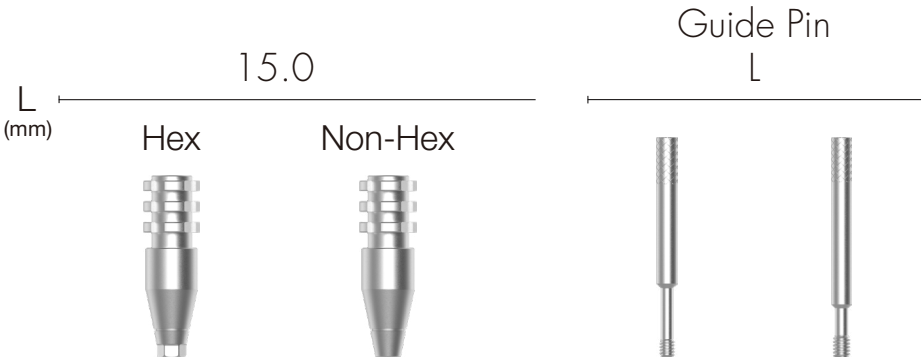

	D (mm)	Hex	Non-Hex	Guide Pin L
M	Ø4.0	PITMH40L	PITMN40L	PIGPTML
M	Ø4.5	PITMH45L	PITMN45L	PIGPTML
R/W	Ø4.0	PITRH40L	PITRN40L	
R/W	Ø4.5	PITRH45L	PITRN45L	
R/W	Ø5.0	PITRH50L	PITRN50L	PIGPTRL
R/W	Ø6.0	PITRH60L	PITRN60L	PIGPTRL
R/W	Ø7.0	PITRH70L	PITRN70L	PIGPTRL

Transfer Impression Coping

Components for Fixture Level Impression
Closed Tray Type
Select specification fits for fixture connection
Streamlined Shape: Easy to transfer
Anti-Rotation Grooves accord with Hex of fixture
Material: Titanium alloy

Tighten with 1.2 Hex Driver by hand

To order as a set as 'Impression Coping body + Guide Pin'
: [For 9mm Length] Product Code + S (ex: TITRH40S**S**)
[For 13mm Length] Product Code + S (ex: TITRH40L**S**)

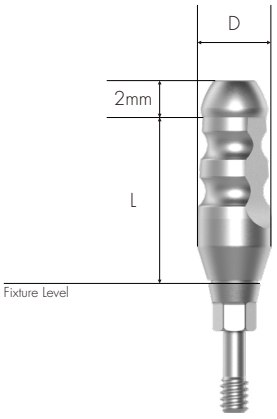

Mini

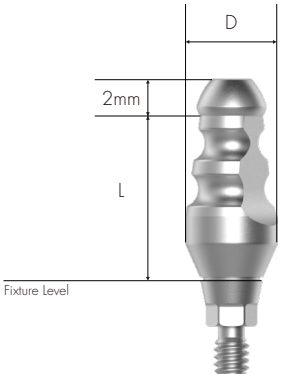

Regular & Wide

L (mm)	D (mm)	9.0 Hex	9.0 Non-Hex	Guide Pin S
M	Ø4.0	TITMH40S	TITMN40S	TIGPTMS
M	Ø4.5	TITMH45S	TITMN45S	TIGPTMS
R/W	Ø4.0	TITRH40S	TITRN40S	TIGPTRS
R/W	Ø4.5	TITRH45S	TITRN45S	TIGPTRS
R/W	Ø5.0	TITRH50S	TITRN50S	TIGPTRS
R/W	Ø6.0	TITRH60S	TITRN60S	TIGPTRS
R/W	Ø7.0	TITRH70S	TITRN70S	TIGPTRS

	D (mm)	L (mm) 13.0 Hex	13.0 Non-Hex	Guide Pin L
				 
M	Ø4.0	TITMH40L	TITMN40L	TIGPTML
M	Ø4.5	TITMH45L	TITMN45L	
R/W	Ø4.0	TITRH40L	TITRN40L	
R/W	Ø4.5	TITRH45L	TITRN45L	
R/W	Ø5.0	TITRH50L	TITRN50L	TIGPTRL
R/W	Ø6.0	TITRH60L	TITRN60L	
R/W	Ø7.0	TITRH70L	TITRN70L	

Fixture Lab Analog

Lab Analog for Fixture Level Impression
Select between Fixture Diameter (Ø 3.5 / Ø 4.0 and above)
Material: Titanium alloy



M

D Ø3.75mm



FLATM350

R/W

D Ø4.25mm



FLATR400

Prosthetic Flow Chart II



Multi Temporary Cylinder

106 p



Multi CCM Cast Cylinder

106 p



Multi Plastic Cast Cylinder

107 p



Multi Ti Link Cylinder

107 p



Multi Lab Analog

109 p



Multi Pick-up Impression Coping

108 p



Multi Transfer Impression Coping

108 p



Multi Straight Abutment Driver

110 p



Multi Straight Abutment

103 p



Multi Angled Abutment

104 p



Multi Healing Cap

109 p



1.2 Hex Driver

140 p



Cover Screw

81 p



Healing Abutment

82 p



1.2 Hex Driver

140 p



ZENEX PLUS Fixture

78 p

Multi Straight Abutment

Abutment for manufacturing screw-retained prosthesis in Multiple Case
Same platform as Multi Angled Abutment
Move into internal oral part by using exclusive Multi Straight Abutment Carrier (Code: MSACR48)
Material: Titanium alloy

Tighten with exclusive Multi Straight Abutment Driver (Code: MSADSR20, Material: POM)
Recommended tightening torque: 30Ncm

To order as a set as 'Abutment + Carrier'
: Product Code + S (ex: MSATR4810S)

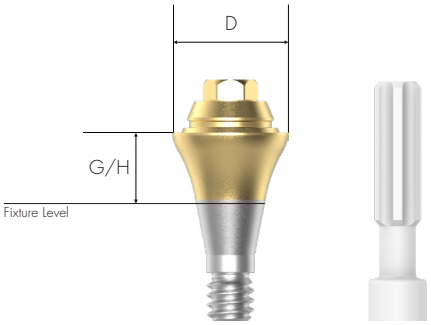

Mini

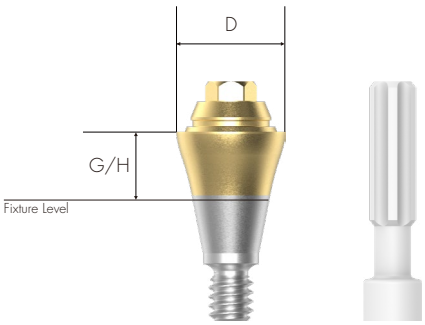

Regular & Wide

M
D Ø4.8mm

G/H (mm)

1.0	2.0	3.0	4.0	5.0
MSATM4810	MSATM4820	MSATM4830	MSATM4840	MSATM4850

R/W
D Ø4.8mm

G/H (mm)

1.0	2.0	3.0	4.0	5.0
MSATR4810	MSATR4820	MSATR4830	MSATR4840	MSATR4850

Multi Angled Abutment

Abutment for manufacturing screw-retained prosthesis in Multiple Case
Abutment of various angles (17°, 30°) for various angled of implant insertion path
Same platform as Multi Straight Abutment
Compensation of fixture placement angle up to 108°
Connect by using exclusive Multi Angled Abutment Carrier (Code: MAACRMC)
Material: Titanium alloy

Tighten with 1.2 Hex Driver
Recommended tightening torque: 30Ncm
Multi Angled Abutment Screw (MAASTM20 for Mini / MAASTR20 for Regular and Wide) included

To order as a set as 'Abutment + Screw + Carrier'
: Product Code + S (ex: MAATRH481725S)



Mini Regular & Wide

M
D Ø4.8mm

G/H (mm)	2.5	3.0	4.0
Angle 17°	MAATMH481725	MAATMH481730	MAATMH481740

M
D Ø4.8mm

G/H (mm)	3.5	4.0	5.0
Angle 30°	MAATMH483035	MAATMH483040	MAATMH483050

R/W

D Ø4.8mm

G/H (mm)	2.5	3.0	4.0
Angle 17°			
	MAATRH481725	MAATRH481730	MAATRH481740

R/W

D Ø4.8mm

G/H (mm)	3.5	4.0	5.0
Angle 30°			
	MAATRH483035	MAATRH483040	MAATRH483050

Multi Temporary Cylinder

Multi Cylinder for making Combination-retained prosthesis from Multi Abutment
For manufacturing Screw-retained temporary Abutment
Material: Titanium alloy

Tighten with 1.2 Hex Driver
Recommended tightening torque: 20Ncm
Multi Cylinder Screw (MTCSR23) included

To order as a set as 'Cylinder + Multi Cylinder Screw'
: Product Code + S (ex: MTCSRN48**S**)

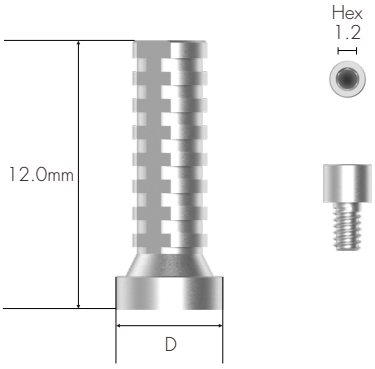

D ∅4.8mm

MTCSRN48

Multi CCM Cast Cylinder

Multi Cylinder for making Screw-retained prosthesis from Multi Abutment
Casting with non-precious alloy for manufacturing customized prosthesis
Melting point of CCM : 1,400 ~ 1,550°C
Material: Co-Cr-Mo alloy

Tighten with 1.2 Hex Driver
Recommended tightening torque: 20Ncm
Multi Cylinder Screw (MTCSR23, Material: Titanium alloy) included

To order as a set as 'Cylinder + Multi Cylinder Screw'
: Product Code + S (ex: MCCCSRN48**S**)

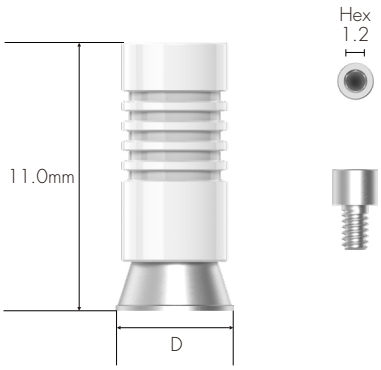

D ∅4.8mm

MCCCSRN48

Multi Plastic Cast Cylinder

Multi Cylinder for making Screw-retained prosthesis from Multi Abutment
Material: POM

Tighten with 1.2 Hex Driver
Recommended tightening torque: 20Ncm
Multi Cylinder Screw (MTCSR23, Material: Titanium alloy) included

To order as a set as 'Cylinder + Multi Cylinder Screw'
: Product Code + S (ex: MPCCSRN48**S**)

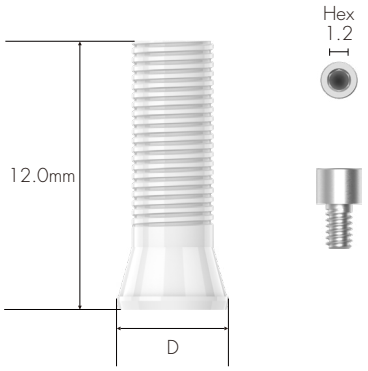

D Ø5.0mm

MPCCSRN48

Multi Ti Link Cylinder

Multi Cylinder for making Combination-retained prosthesis from Multi Abutment
Use when producing Customized Abutment (Titanium & Zirconia) and Crown by CAD/CAM equipment
Use exclusive implant library of ZENEX PLUS Implant System
Abutment Level Impression
Material: Titanium alloy

Tighten with 1.2 Hex Driver
Recommended tightening torque: 20Ncm
Multi Cylinder Screw (MTCSR23) included

To order as a set as 'Cylinder + Multi Cylinder Screw'
: Product Code + S (ex: MTLCSRN48**S**)

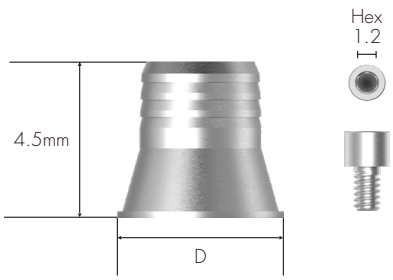

D Ø4.8mm

MTLCSRN48

Multi Pick-up Impression Coping

Components for taking Abutment Level impression for Multi Abutment
Open Tray Type
Material: Titanium alloy

Tighten with 1.2 Hex Driver by hand
Multi Pick-up Impression Coping Guide Pin (MPICSRGP) included

To order as a set as 'Impression Coping body + Guide Pin'
: Product Code + S (ex: MPICSR48S)

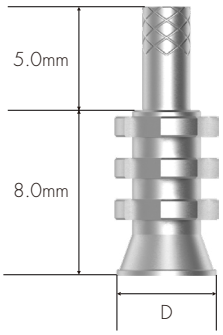

D ∅4.8mm

MPICSR48

Multi Transfer Impression Coping

Components for taking Abutment Level impression for Multi Abutment
Closed Tray Type
Material: Titanium alloy

Tighten with 1.2 Hex Driver by hand

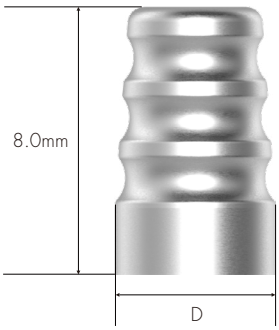

D ∅4.8mm

MTICSR48

Multi Lab Analog

Lab Analog for Multi Abutment
Material: Titanium alloy



MLASR48

Multi Healing Cap

Protect Cap for Multi Abutment
Material: Titanium alloy

Tighten with 1.2 Hex Driver by hand



D ∅4.8mm

MHCSR48

Multi ScanBody

ScanBody for Multi Abutment

ScanBody for manufacturing customized Titanium abutment
Use for Oral scan (Model scan available as well)
Material: Titanium alloy

Tighten with 1.2 Hex Driver by hand

To order as a set as 'ScanBody + ScanBody Screw'
: Product Code + S (ex: MSBSR4809S)

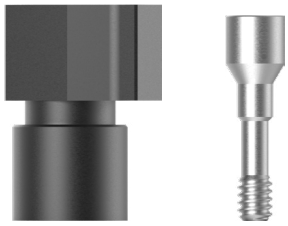

MSBSR4809

Multi Straight Abutment Driver

Torque driver for Multi Straight Abutment
Material: Stainless Steel (TrimRite®)



MSADSR20

IZEN
IMPLANT

Prosthetic Flow Chart III



119 p



Metal Housing



White Spacer

114 p



Kerator Lab Analog

121 p



Kerator Impression Coping

121 p



Magic Tool

120 p



Ball Abutment Cap

114 p



Ball Abutment Retainer

114 p



Ball Abutment Lab Analog

115 p



Ball Abutment Driver

116 p



Ball Abutment

113 p



Kerator Torque Tip

120 p



Kerator Abutment

117 p



Kerator Angled Abutment

118 p



1.2 Hex Driver

140 p



Cover Screw

81 p



Healing Abutment

82 p



1.2 Hex Driver

140 p



ZENEX PLUS Fixture

78 p

Ball Abutment

Abutment for overdenture using O-ring attachment
Compensation of mounting angle up to 20°
Material: Titanium alloy

Tighten with exclusive Ball Abutment Driver (Code: BAD24)
Recommended tightening torque: 30Ncm

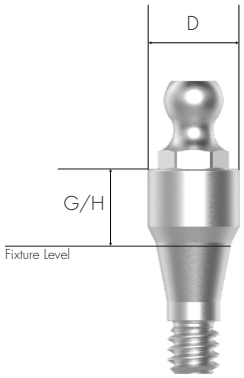

Mini

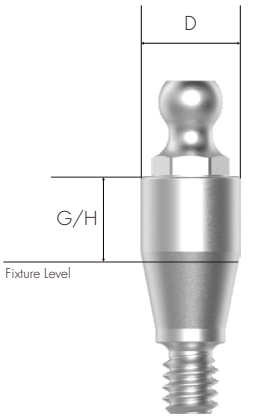

Regular & Wide

M
D Ø3.5mm

G/H (mm)

1.0	2.0	3.0	4.0	5.0	6.0
BATM3510	BATM3520	BATM3530	BATM3540	BATM3550	BATM3560

R/W
D Ø3.5mm

G/H (mm)

1.0	2.0	3.0	4.0	5.0	6.0
BATR3510	BATR3520	BATR3530	BATR3540	BATR3550	BATR3560

Ball Abutment Cap Set

O-ring attachment for Ball Abutment
Replace O-ring on Ball Abutment Cap
Packing Unit: Ball Abutment Cap (Material: Titanium alloy)+Ball Abutment Lab O-ring (Material: Silicone)

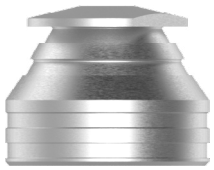

BASRCS

Ball Abutment Retainer Set

Use in case lack of vertical diameter comparing to Ball Abutment Retainer
Packing Unit: Ball Abutment Retainer (Material: Titanium alloy)+Ball Abutment Lab O-ring (Material: Silicone)

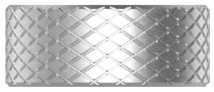

BASRRS

Ball Abutment O-ring Set

O-ring set
Packing Unit: Ball Abutment O-ring 5 EA
Material: Silicone



BASROS

Ball Abutment Lab Analog

Lab Analog for Ball Abutment
Material: Titanium alloy



BAALA

Ball Abutment Driver

Torque driver for Ball Abutment
Material: Stainless Steel (TrimRite®)+Titanium alloy+Silicone



BAD24

Kerator Abutment

Compensation of fixture placement angle up to 40°
1.5mm lower vertical dimension
Composition of multiple attachments with stable retention

Connect with exclusive driver
Recommended tightening torque: 30Ncm

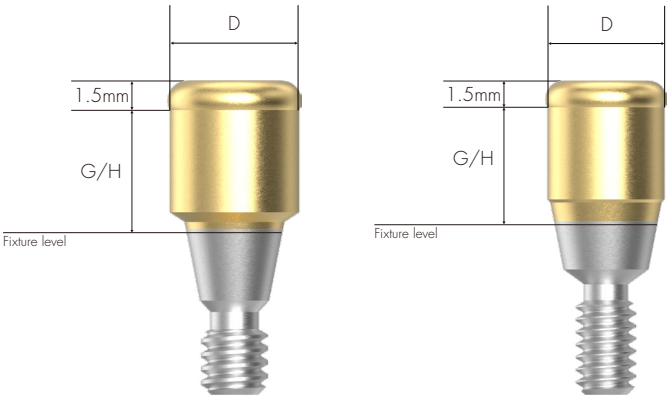

Mini

Regular & Wide

M
D Ø3.7mm

G/H (mm)

1.0	2.0	3.0	4.0	5.0	6.0
G351	G352	G353	G354	G355	G356

R/W
D Ø3.7mm

G/H (mm)

1.0	2.0	3.0	4.0	5.0	6.0
G401	G402	G403	G404	G405	G406

Kerator Angled Abutment

1.5mm lower vertical dimension
Composition of multiple attachments with stable retention

Connect with 1.2 Hex driver
Recommended tightening torque: 30Ncm

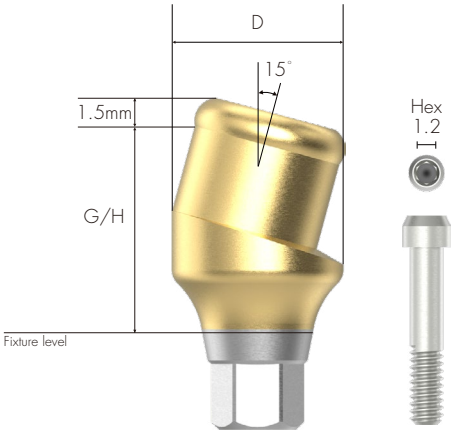

Mini

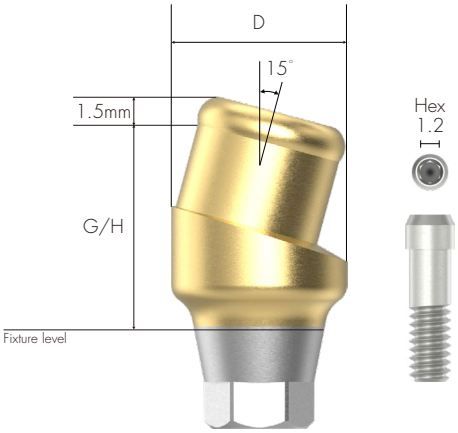

Regular & Wide

M
D Ø3.7mm

G/H (mm) — 1.5 — 3.0



G35AN1.5



G35AN3.0

R/W
D Ø3.7mm

G/H (mm) — 1.5 — 3.0



G4AN1.5



G4AN3.0

Kerator CDPH Set

Composition: White spacer / denture cap connected black processing male & Replacement male (Red, Blue & Pink)
Select replacement male of adequate retention to use according to cases
Replace replacement male by using Kerator Magic tool



CDPH SET

Kerator Male Cap

Retention power of KERATOR male cap is down (up to 20%) and red cap(angle) is included in the male package
Colors of cap determine retention power and it minimizes Denture Repair even there is any continuous bone loss

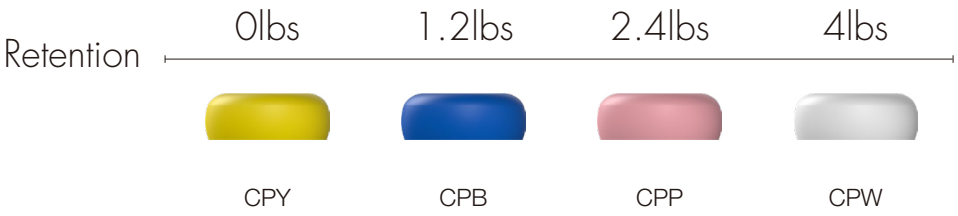

CPY CPB CPP CPW



CPG CPO CPR

Kerator Magic Tool

Use to connect and remove replacement male on denture cap
As separated into two pieces, it is easy for maintenance



KMH002

Kerator Torque Tip

Torque driver for Kerator Abutment

Round Type



KMD719

Kerator Impression Coping

Pick-up Impression Coping for Kerator abutment
Closed Tray Type



DKI4845

Kerator Lab Analog

Lab Analog for Kerator Abutment



DKA3854

Prosthetic Flow Chart IV

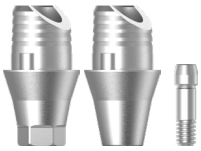

Ti Link Abutment

124 p



Ti Blank Abutment

125 p



Fixture Lab Analog

101 p



Pick-up Impression Coping

97 p



Transfer Impression Coping

99 p



Cover Screw

81 p



Healing Abutment

82 p



1.2 Hex Driver

140 p



ZENEX PLUS Fixture

78 p

ScanBody

ScanBody for manufacturing customized Titanium abutment
Use for Oral scan (Model scan available as well)
Material: Titanium alloy

Tighten with 1.2 Hex Driver by hand

To order as a set as 'ScanBody + ScanBody Screw'
: Product Code + S (ex: TSBR4310S)

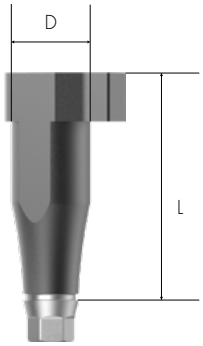

M
D ∅4.0mm
L 14.0mm



TSBM4014

R/W
D ∅4.3mm
L 10.0mm



TSBR4310

Ti Link Abutment

Abutment for manufacturing Cement/Combination-retained type prosthesis
For manufacturing custom abutment (Titanium & Zirconia) and crown by CAD/CAM equipment
Select specification fits for fixture Connection
Use exclusive library for ZENEX PLUS Implant system
Fixture Level Impression
Material: Titanium alloy

Tighten with 1.2 Hex Driver
Recommended tightening torque: 30Ncm

To order as a set as 'Abutment + Screw'
: Product Code + S (ex: TLATRH4510S)

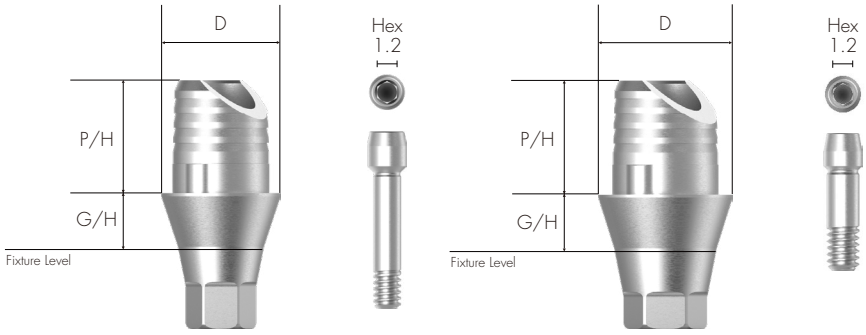

Mini　　Regular & Wide

M
D Ø4.0mm

G/H (mm)	1.0		2.0	
P/H (mm)	3.8			
				
	Hex	Non-Hex	Hex	Non-Hex
	TLATMH4010	TLATMN4010	TLATMH4020	TLATMN4020

R/W
D Ø4.5mm

G/H (mm)	1.0		2.0	
P/H (mm)	3.8			
				
	Hex	Non-Hex	Hex	Non-Hex
	TLATRH4510	TLATRN4510	TLATRH4520	TLATRN4520

Ti Blank Abutment

Manufacturing customized abutment with milling machine
Select specification fits for fixture Connection
Digital Impression
Material: Titanium alloy

Tighten with 1.2 Hex Driver
Recommended tightening torque: 30Ncm
Product line-up applied for various milling machine brands
(Milling machine manufacturer: Arum(Doowon), Manix, Vatech, RND)

To order as a set as 'Abutment + Screw'
: Product Code + S (ex: TBATRH10A**S**)

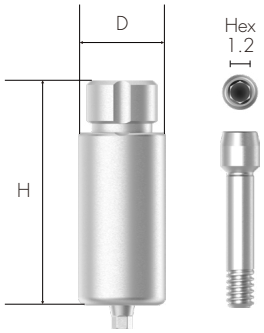

Mini

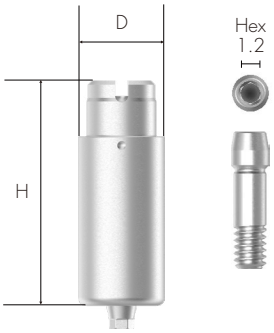

Regular & Wide

For Arum

M

D ∅10.0mm

H (mm) — 20


Hex — TBATMH10A


Non-Hex — TBATMN10A

R/W

D ∅10.0mm

H (mm) — 20


Hex — TBATRH10A


Non-Hex — TBATRN10A

For Manix

M

D ∅10.0mm

H (mm) — 20



Hex: TBATMH10M



Non-Hex: TBATMN10M

R/W

D ∅10.0mm

H (mm) — 20



Hex: TBATRH10M



Non-Hex: TBATRN10M

ZENEX KIT

ZENEX KIT

COMPOSITION

130 ZENEX SURGERY KIT
146 ZENEX SIMPLE KIT
158 ZENEX EASY SURGERY KIT
172 ZENEX SUPERWIDE KIT
184 ZENEX PROSTHETIC KIT
192 ZENEX GUIDE KIT
208 ZENEX GUIDE MINI KIT
220 ZENEX GUIDE WIDE KIT

OTHER SURGICAL INSTRUMENTS

246 Tissue Punch
246 Trephine Drill
247 Bone Profiler
248 ZENEX Guide Start Drill

ZENEX SURGERY KIT





T-System

ZENEX SURGERY KIT
(ZENSGKIT)

Composition on lower kit tray



Depth Gauge
DG1720

Torque Wrench
TW60B

Steel Bowl
STBOWL

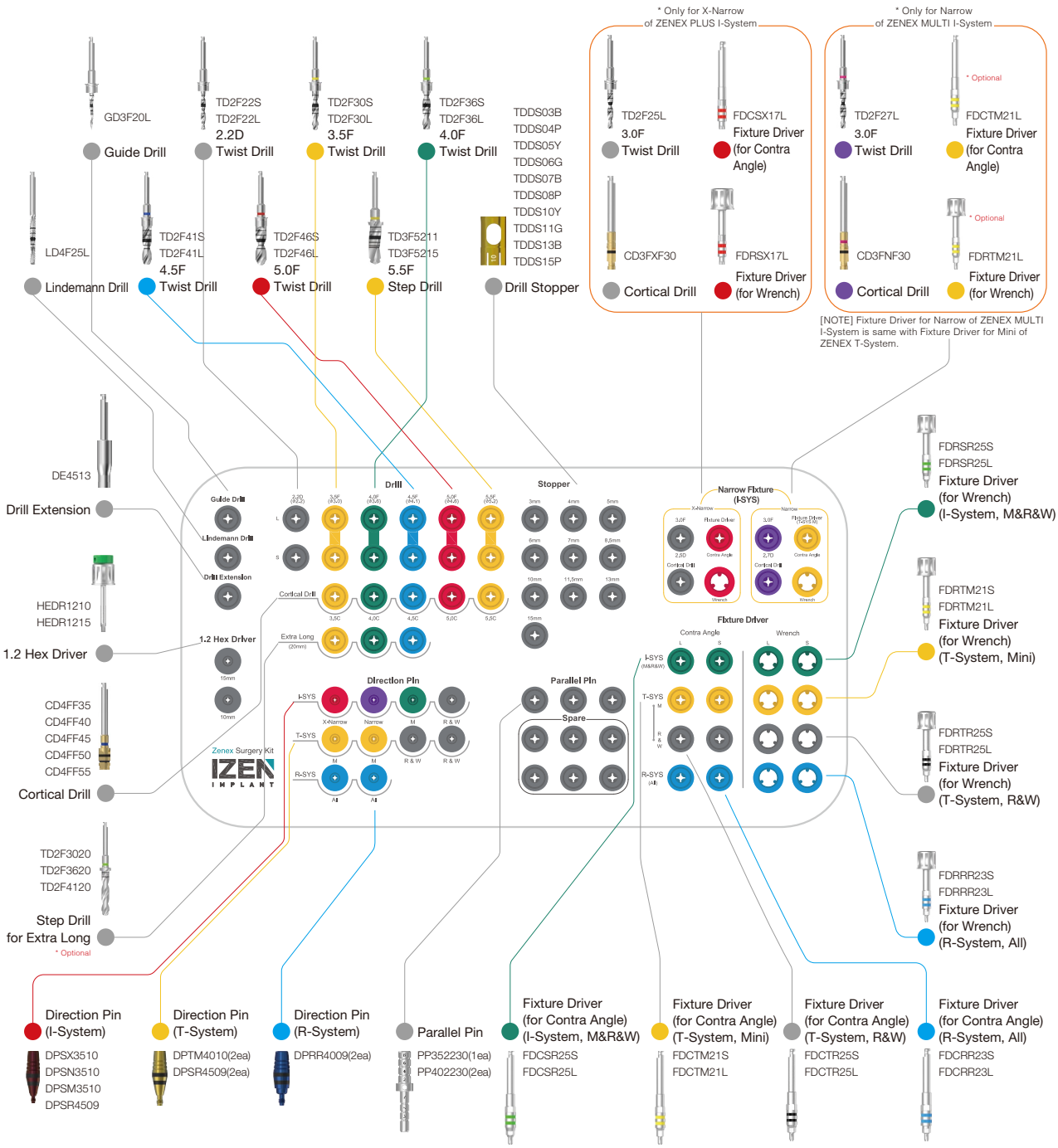

ZENEX SURGERY KIT
T-System (ZENSGTKIT)

Composition on lower kit tray



Depth Gauge
DG1720

Torque Wrench
TW60B

Steel Bowl
STBOWL

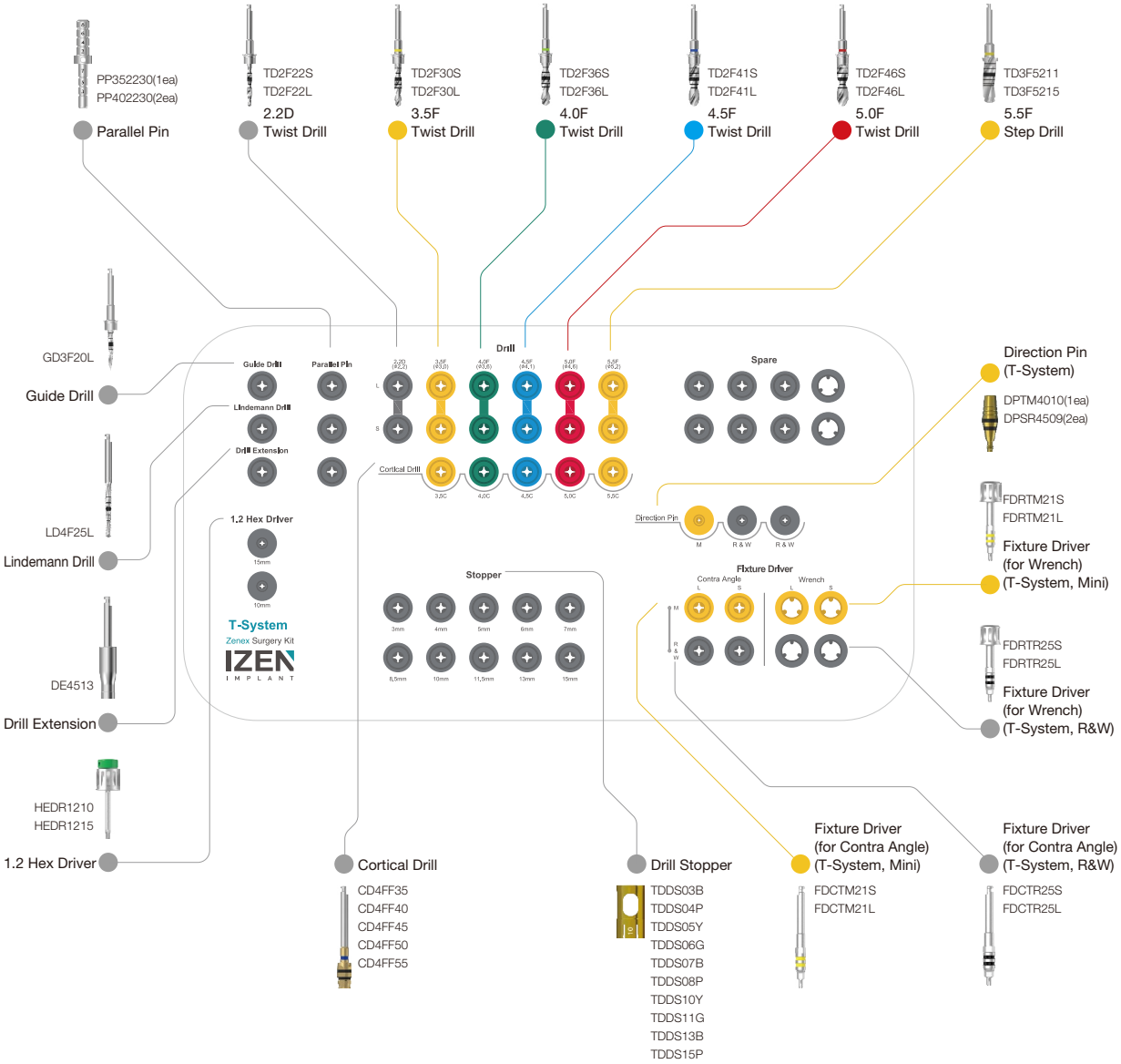

ZENEX SURGERY KIT Instruments

Guide Drill

- Drill to mark base hole on the bone for easy initial drilling
- Available to control drilling depth by using with stopper
- Product Code in the Kit: GD3F20L
- Material: Stainless Steel (TrimRite®)

D1/D2 (mm)	Ø1.5 / Ø2.0
Short	GD3F20S
Long	GD3F20L

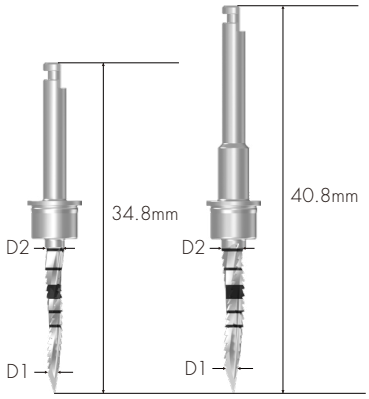

Lindemann Drill

- Outward blades allow side cutting during drilling
- Available to use when removing ridge part of extraction socket
- Product Code in the Kit: LD4F25L
- Material: Stainless Steel (TrimRite®)

D1/D2 (mm)	Ø1.5 / Ø2.0	Ø2.0 / Ø2.5
Short	LD4F20S	LD4F25S
Long	LD4F20L	LD4F25L

D1/D2 (mm)	Ø3.0 / Ø3.5
Medium	LD4F35M

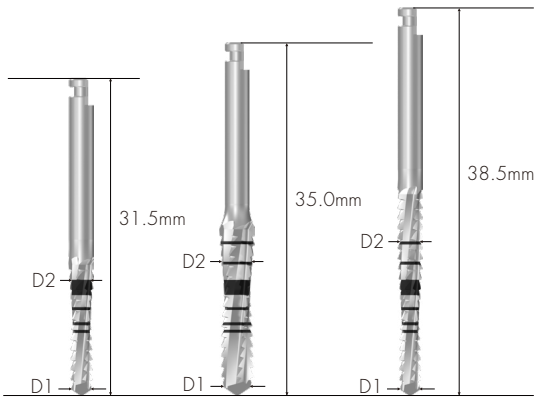

ZENEX SURGERY KIT Instruments

Drill Extension

- Lengthen surgical instrument in use by connecting to drill and Implant motor
- Be sure to use after accurate connection to prevent product detachment or bending that connected to Drill Extension
- Material: Stainless Steel (TrimRite®) +Titanium alloy

DE4513

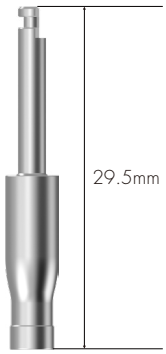

Twist Drill

- Straight drill to shorten surgery steps
- Available to drill to desired depth by attaching stopper (marking line matches with stopper connection)
- Be sure to use stopper since depth control may be difficult due to excellent cutting power.
- Drill of 3.0F (Ø2.2/ 2.5) is applied only for X-Narrow of ZENEX Plus I-System. (Product code in the Kit : TD2F25L)
- Drill of 3.0F (Ø2.2/ 2.7) is applied only for Narrow of ZENEX Multi I-System. (Product code in the Kit : TD2F27L)
- Material: Stainless Steel (TrimRite®)

*Optional

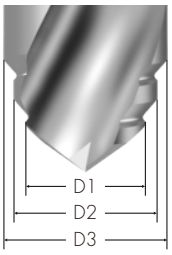

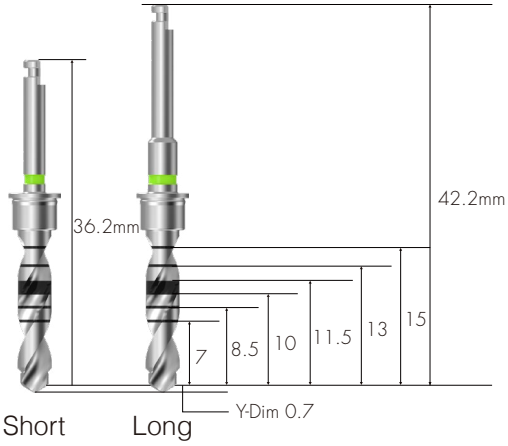

D1/D2/D3 (mm)	2.2D (Ø1.8/ Ø2.2)	3.0F (Ø2.2 / Ø2.5)	3.0F (Ø2.2 / Ø2.7)	3.5F (Ø2.2 / Ø3.0)
Short	TD2F22S	TD2F25S *	TD2F27S *	TD2F30S
Long	TD2F22L	TD2F25L	TD2F27L	TD2F30L

D1/D2/D3 (mm)	4.0F (Ø3.0 / Ø3.6)	4.5F (Ø3.0 / Ø3.6 / Ø4.1)	5.0F (Ø3.0 / Ø4.1 / Ø4.6)
Short	TD2F36S	TD2F41S	TD2F46S
Long	TD2F36L	TD2F41L	TD2F46L

Step Drill

- Straight drill to shorten surgery steps
- As stopper is applied in the drill, secure to use although depth control may be difficult due to excellent cutting power
- Colored line on grip part of drill indicates diameter of drill and matching fixture size.
- Material: Stainless Steel (TrimRite®)

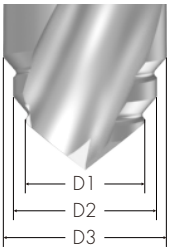

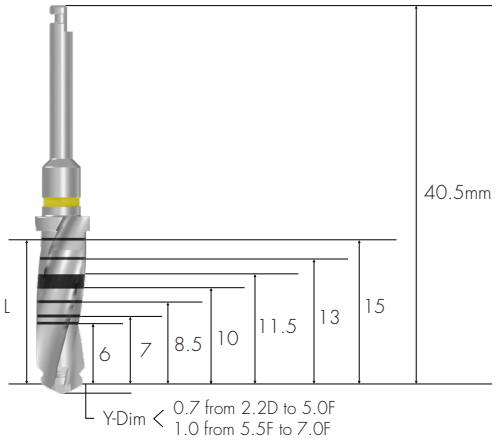

- Two kinds of 5.5F Drill (Ø 4.6 / Ø 5.2) are included.

D1/D2/D3 (mm)	5.5F (Ø4.6 / Ø5.2)
Short	TD3F5211
Long	TD3F5215

- Optional extras: Three kinds of step drill for 20mm extra long







D1/D2/D3 (mm)	3.5F (Ø2.2 / Ø3.0)	4.0F (Ø3.0 / Ø3.6)	4.5F (Ø3.0 / Ø3.6 / Ø4.1)
Extra long	TD2F3020	TD2F3620	TD2F4120

ZENEX SURGERY KIT Instruments

Drill Stopper

- Indicated number on each stopper means exposed length, excluding head of drill (Y-Dim) when connected to drill
- Differentiate color by length for easy identification
- Material: Titanium alloy

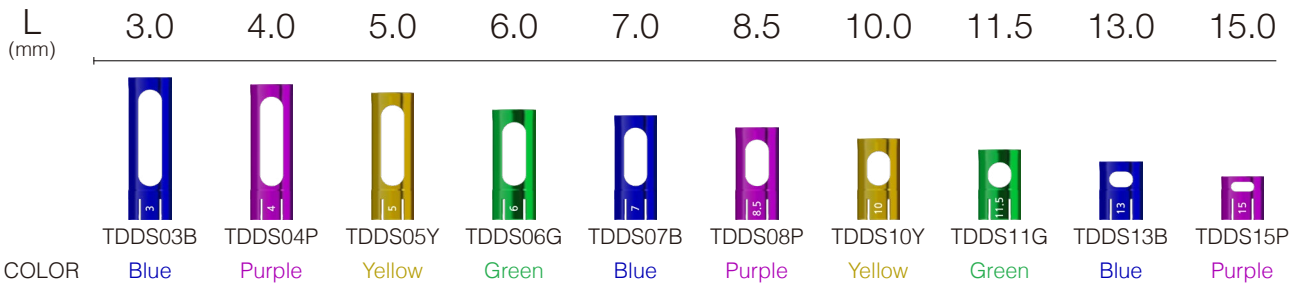

L (mm)	3.0	4.0	5.0	6.0	7.0	8.5	10.0	11.5	13.0	15.0
	TDDS03B	TDDS04P	TDDS05Y	TDDS06G	TDDS07B	TDDS08P	TDDS10Y	TDDS11G	TDDS13B	TDDS15P
COLOR	Blue	Purple	Yellow	Green	Blue	Purple	Yellow	Green	Blue	Purple

Cortical Drill

- Drill used for removing cortical bone from hard bone
- Drill to the bottom of each marking line
- The lower marking line is for drilling on normal bone and the upper marking line is for drilling on hard bone
- Material: Stainless Steel (TrimRite®)

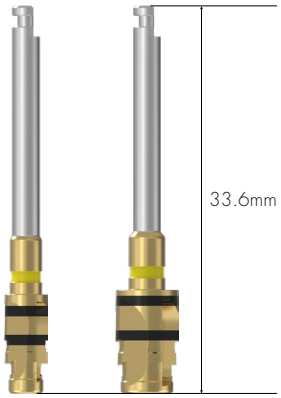

	3.0C (X-Narrow)	3.0C (Narrow)	3.5C	4.0C	4.5C	5.0C	5.5C
	CD3FXF30	CD3FNF30	CD4FF35	CD4FF40	CD4FF45	CD4FF50	CD4FF55
COLOR	None	Purple	Yellow	Green	Blue	Red	Yellow

Direction Pin

- Confirm gingiva height and path after implant placement
- DPSR4509: Available to use in case of ZENEX I-System (Regular & Wide) and ZENEX T-System (Regular & Wide)
- Material: Titanium alloy

I-System



	DPSX3510	DPSN3510	DPSM3510	DPSR4509
COLOR	Red	Purple	Green	Metal

- For ZENEX MULTI I-System (based on connection): Narrow, Mini, Regualr & Wide
- For ZENEX PLUS I-System (based on connection): X-Narrow, Mini, Regualr & Wide

T-System

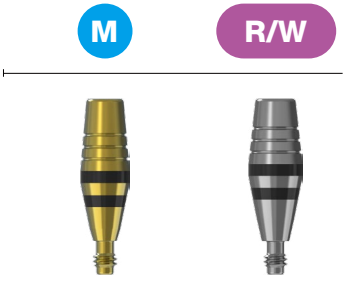

	DPTM4010	DPSR4509
COLOR	Yellow	Metal

R-System



	DPRR4009
COLOR	Blue

ZENEX SURGERY KIT Instruments

Parallel Pin

- Used for confirmation of drilling depth and path
- Available to use after drilling with Ø2.2 Drill and Ø3.0 drill
- Composition in the kit: PP352230 (1 ea) + PP402230 (2 ea)
- Material: Stainless Steel

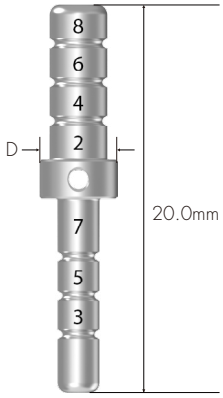

D (mm)	Ø3.5	Ø4.0	Ø5.0	Ø6.0
	PP352230	PP402230	PP502230	PP602230

Fixture Driver

- For Contra Angle: Directly attached to fixture by connecting to handpiece when using Implant motor
- For Wrench: Directly attached to fixure by using Torque Wrench
- Two-staged coloring enables measurement up to 5mm height at 1mm intervals
- Be sure to use after accurate connection because once used with incorrectly connected driver, it is impossible to remove fixture
- Be sure to use accurate fixture driver according to the system of fixture.

※ Fixture Driver for Narrow of ZENEX MULTI I-System: Same with Mini of ZENEX T-System (**Optional**)

- Material: Stainless Steel (TrimRite®)

I-System

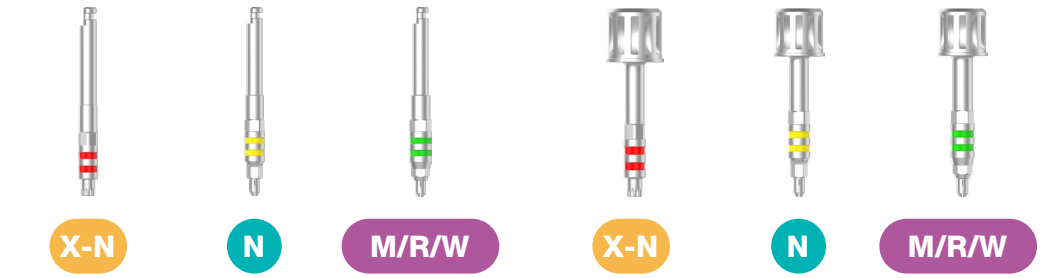

	Contra Angle			Wrench		
Short	FDCSX17S	FDCTM21S	FDCSR25S	FDRSX17S	FDRTM21S	FDRSR25S
Long	FDCSX17L	FDCTM21L	FDCSR25L	FDRSX17L	FDRTM21L	FDRSR25L
COLOR	Red	Yellow	Green	Red	Yellow	Green

- For ZENEX MULTI I-System (based on connection): Narrow, Mini, Regualr & Wide
- For ZENEX PLUS I-System (based on connection): X-Narrow, Mini, Regualr & Wide

T-System

	Contra Angle		Wrench	
				
	M	R/W	M	R/W
Short	FDCTM21S	FDCTR25S	FDRTM21S	FDRTR25S
Long	FDCTM21L	FDCTR25L	FDRTM21L	FDRTR25L
COLOR	Yellow	Black	Yellow	Black

R-System

	Contra Angle	Wrench
		
	M/R/W	M/R/W
Short	FDCRR23S	FDRRR23S
Long	FDCRR23L	FDRRR23L
COLOR	Blue	Blue

ZENEX SURGERY KIT Instruments

1.2 Hex Driver

- Driver for connecting with Torque Wrench
- Used for connecting to cover screw and surgical instrument with 1.2 Hex
- Follow recommended tightening torque calculation value
- Be sure to check transformation of Hex tip before use
- Material: Stainless Steel+Titanium alloy

L (mm)	10.0	15.0
	HEDR1210	HEDR1215

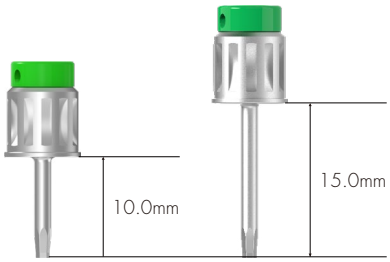

Torque Wrench

- Used for placing fixture and tightening implant abutments and screws
- Confirm torque calculation value by pulling the bar to be aligned with the marked line
- Recommended to use by pressing head to prevent detachment of Torque Wrench and surgical instruments
- Material: Stainless Steel



TW60B

Depth Gauge

- Measuring drilling depth
- Measurable depth: 6~20mm
- Material: Titanium alloy

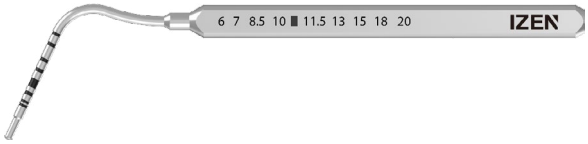

DG1720

Steel Bowl

- Used for cleaning surgery instruments
- Material: Stainless Steel



STBOWL

Drilling Sequence

Ø 3.5mm Fixture

(ZENEX MULTI & PLUS T-System Mini)

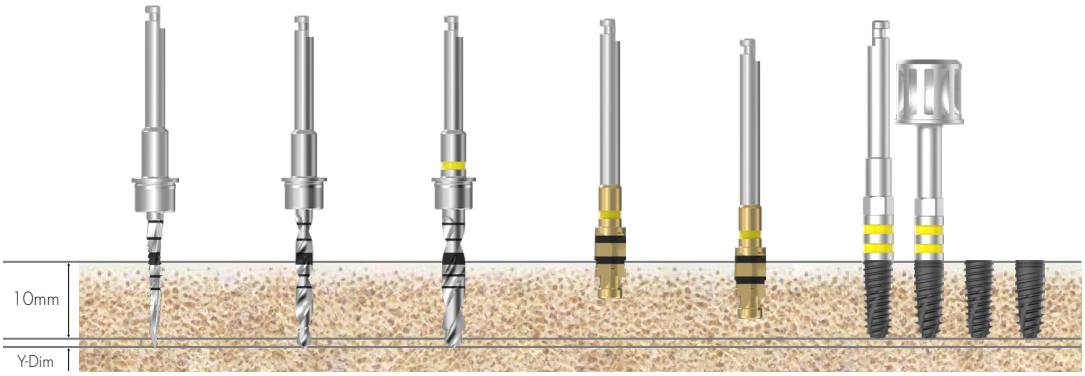

Bone Quality	Guide Drill	Twist Drill (Ø2.2)	Twist Drill (Ø3.0)	Cortical Drill (Lower Line)	Cortical Drill (Upper Line)	Ø3.5 Fixture
Soft	▶	▶	▶			
Normal	▶	▶	▶	▶		Implant Placement
Hard	▶	▶	▶		▶	

Ø 4.0mm Fixture

(ZENEX MULTI & PLUS T-System Regular)

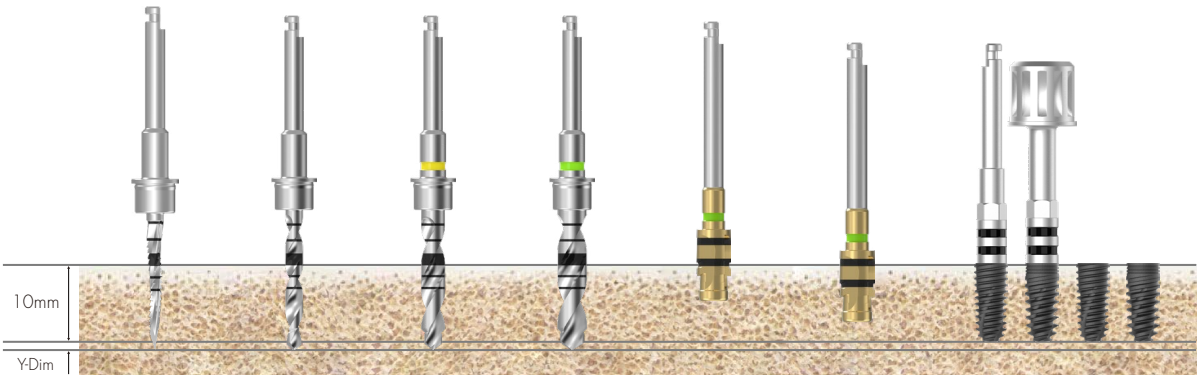

Bone Quality	Guide Drill	Twist Drill (Ø2.2)	Twist Drill (Ø3.0)	Twist Drill (Ø3.6)	Cortical Drill (Lower Line)	Cortical Drill (Upper Line)	Ø4.0 Fixture
Soft	▶	▶	▶	▶			
Normal	▶	▶	▶	▶	▶		Implant Placement
Hard	▶	▶	▶	▶		▶	

Drilling Sequence

Ø 4.5mm Fixture

(ZENEX MULTI & PLUS T-System Regular)

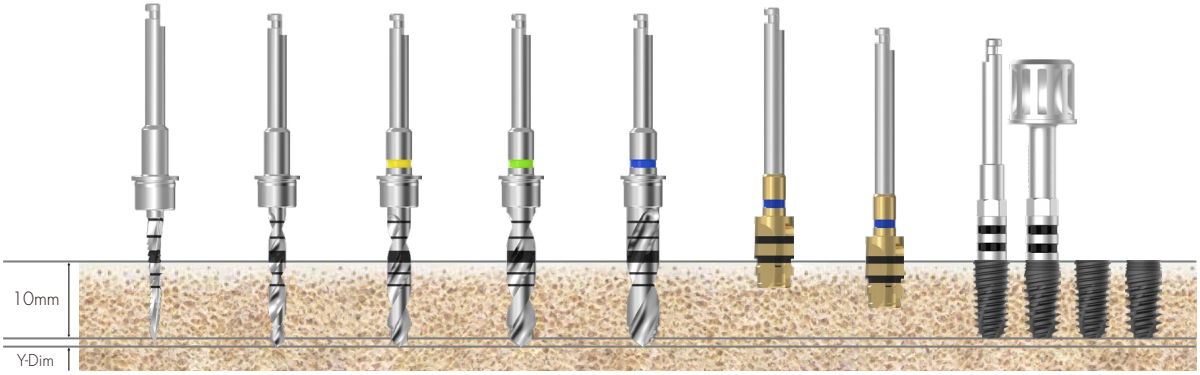

Bone Quality	Guide Drill	Twist Drill (Ø2.2)	Twist Drill (Ø3.0)	Twist Drill (Ø3.6)	Twist Drill (Ø4.1)	Cortical Drill (Lower Line)	Cortical Drill (Upper Line)	Ø4.5 Fixture
Soft	▶	▶	▶	▶	▶			
Normal	▶	▶	▶	▶	▶	▶		Implant Placement
Hard	▶	▶	▶	▶	▶		▶	

Ø 5.0mm Fixture

(ZENEX MULTI & PLUS T-System Wide)

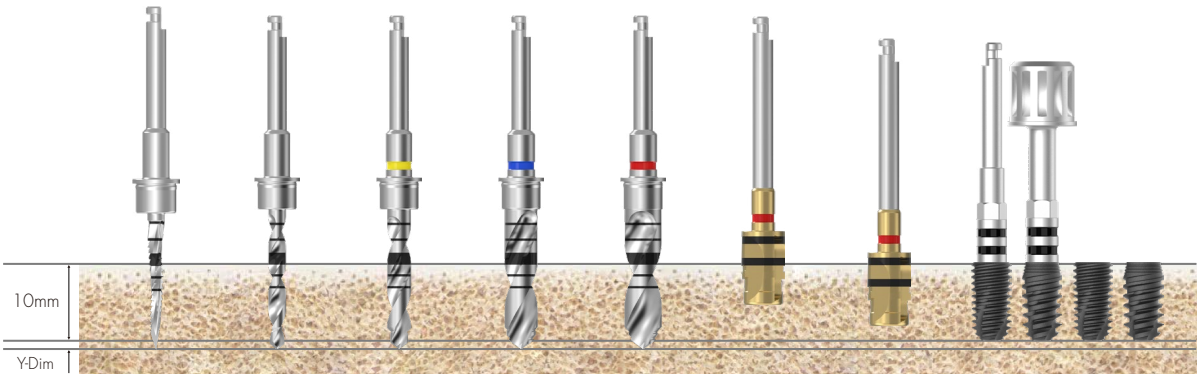

Bone Quality	Guide Drill	Twist Drill (Ø2.2)	Twist Drill (Ø3.0)	Twist Drill (Ø4.1)	Twist Drill (Ø4.6)	Cortical Drill (Lower Line)	Cortical Drill (Upper Line)	Ø5.0 Fixture
Soft	▶	▶	▶	▶	▶			
Normal	▶	▶	▶	▶	▶	▶		Implant Placement
Hard	▶	▶	▶	▶	▶		▶	

Drilling Sequence

Ø 5.5mm Fixture

(ZENEX MULTI & PLUS T-System Wide)

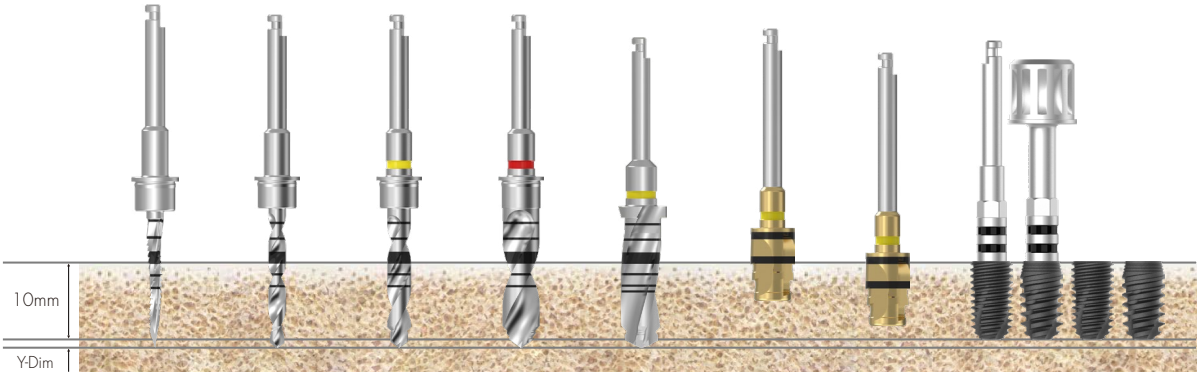

Bone Quality	Guide Drill	Twist Drill (Ø2.2)	Twist Drill (Ø3.0)	Twist Drill (Ø4.6)	Step Drill (Ø5.2)	Cortical Drill (Lower Line)	Cortical Drill (Upper Line)	Ø5.5 Fixture
Soft	▶	▶	▶	▶	▶			
Normal	▶	▶	▶	▶	▶	▶		Implant Placement
Hard	▶	▶	▶	▶	▶		▶	

IZEN
IMPLANT

ZENEX SIMPLE KIT



T-System

ZENEX SIMPLE KIT
T-System (ZENSPTKIT)

Composition on lower kit tray



Depth Gauge
DG1720

Torque Wrench
TW60B

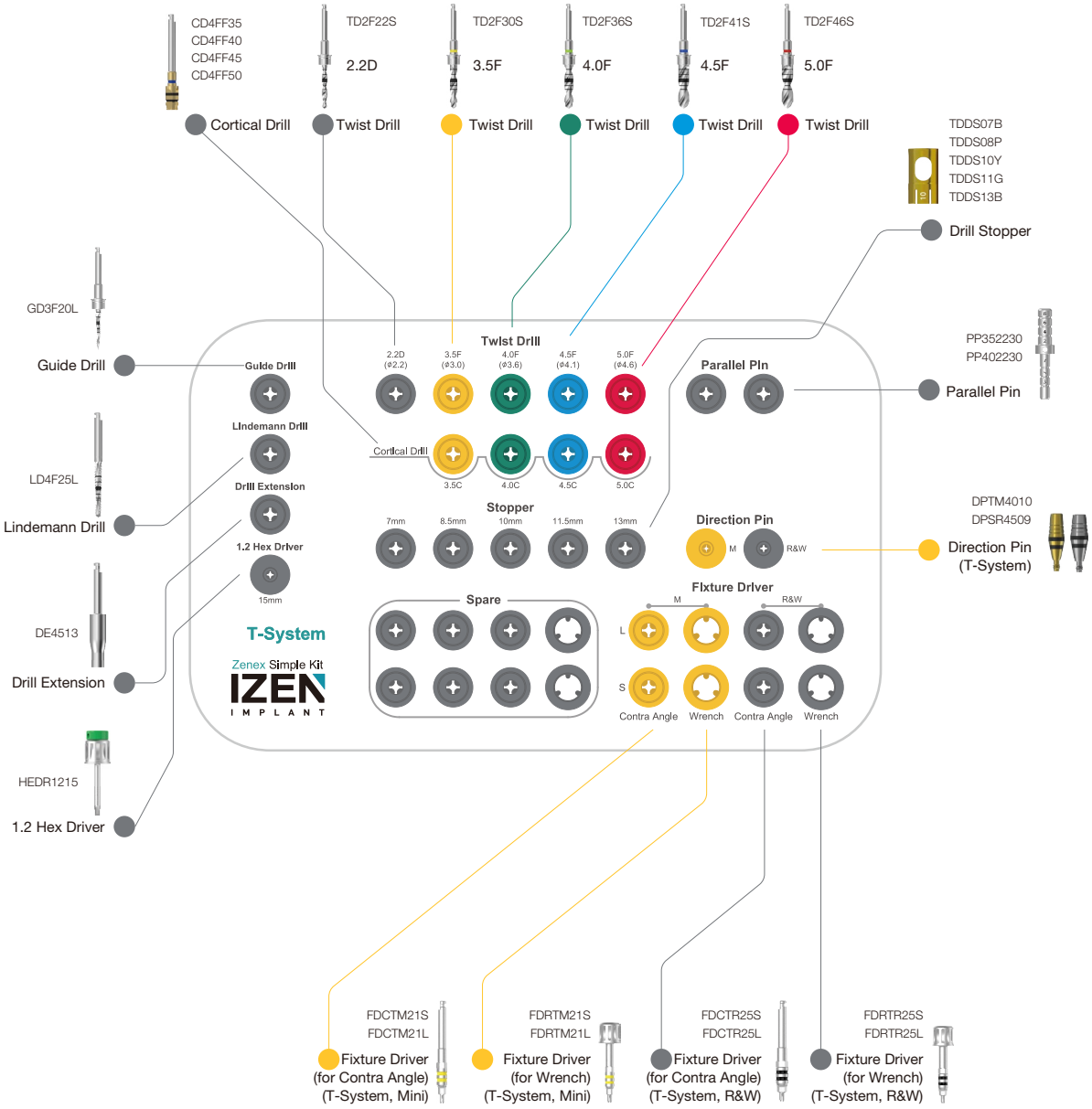

ZENEX SIMPLE KIT Instruments

Guide Drill

- Drill to mark base hole on the bone for easy initial drilling
- Available to control drilling depth by using with stopper
- Product Code in the Kit: GD3F20L
- Material: Stainless Steel (TrimRite®)

D1/D2 (mm)	Ø1.5 / Ø2.0
Short	GD3F20S
Long	GD3F20L

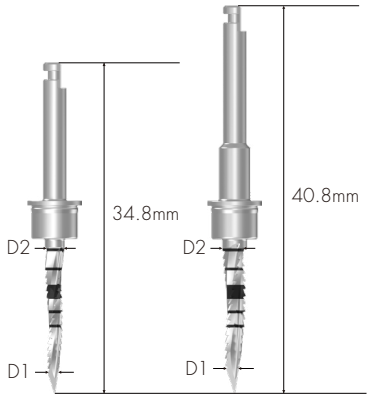

Lindemann Drill

- Outward blades allow side cutting during drilling
- Available to use when removing ridge part of extraction socket
- Product Code in the Kit: LD4F25L
- Material: Stainless Steel (TrimRite®)

D1/D2 (mm)	Ø1.5 / Ø2.0	Ø2.0 / Ø2.5
Short	LD4F20S	LD4F25S
Long	LD4F20L	LD4F25L

D1/D2 (mm)	Ø3.0 / Ø3.5
Medium	LD4F35M

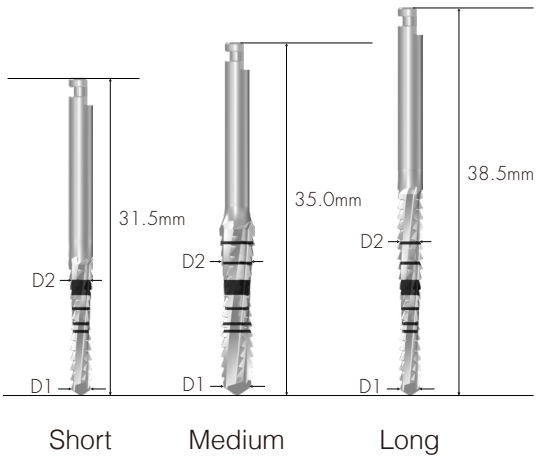

Drill Extension

- Lengthen surgical instrument in use by connecting to drill and Implant motor
- Be sure to use after accurate connection to prevent product detachment or bending that connected to Drill Extension
- Material: Stainless Steel (TrimRite®) +Titanium alloy

DE4513

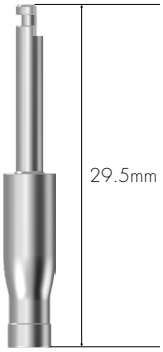

Twist Drill

- Straight drill to shorten surgery steps
- Available to drill to desired depth by attaching stopper (marking line matches with stopper connection)
- Be sure to use stopper since depth control may be difficult due to excellent cutting power.
- Material: Stainless Steel (TrimRite®)

*Optional

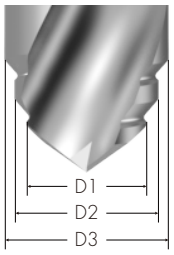

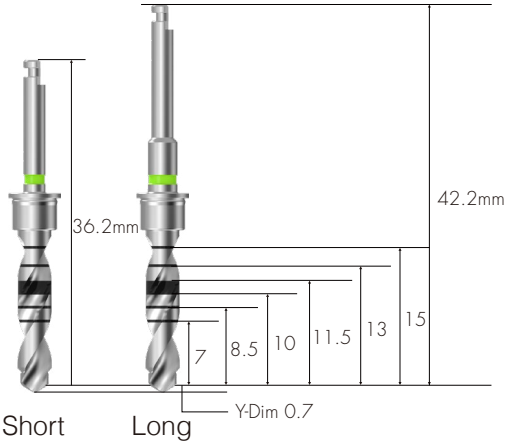

D1/D2/D3 (mm)	2.2D (Ø1.8/ Ø2.2)	3.5F (Ø2.2 / Ø3.0)	4.0F (Ø3.0 / Ø3.6)
Short	TD2F22S	TD2F30S	TD2F36S

D1/D2/D3 (mm)	4.5F (Ø3.0 / Ø3.6 / Ø4.1)	5.0F (Ø3.0 / Ø4.1 / Ø4.6)
Short	TD2F41S	TD2F46S

ZENEX SIMPLE KIT Instruments

Drill Stopper

- Indicated number on each stopper means exposed length, excluding head of drill (Y-Dim) when connected to drill
- Differentiate color by length for easy identification
- Material: Titanium alloy

L (mm)	7.0	8.5	10.0	11.5	13.0
					
	TDDS07B	TDDS08P	TDDS10Y	TDDS11G	TDDS13B
COLOR	Blue	Purple	Yellow	Green	Blue

Cortical Drill

- Drill used for removing cortical bone from hard bone
- Drill to the bottom of each marking line
- The lower marking line is for drilling on normal bone and the upper marking line is for drilling on hard bone
- Material: Stainless Steel (TrimRite®)

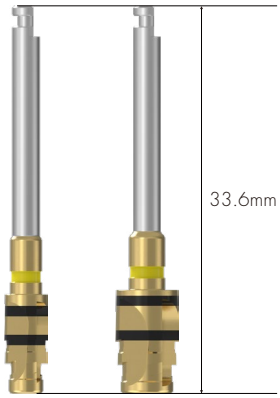

	3.5C	4.0C	4.5C	5.0C
	CD4FF35	CD4FF40	CD4FF45	CD4FF50
COLOR	Yellow	Green	Blue	Red

Direction Pin

- Confirm gingiva height and path after implant placement
- DPSR4509: Available to use in case of ZENEX I-System (Regular & Wide) and ZENEX T-System (Regular & Wide)
- Material: Titanium alloy

I-System



	DPSX3510	DPSN3510	DPSM3510	DPSR4509
COLOR	Red	Purple	Green	Metal

- For ZENEX MULTI I-System (based on connection): Narrow, Mini, Regualr & Wide
- For ZENEX PLUS I-System (based on connection): X-Narrow, Mini, Regualr & Wide

T-System

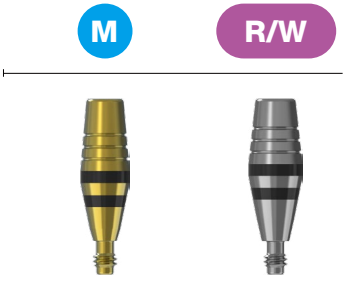

	DPTM4010	DPSR4509
COLOR	Yellow	Metal

R-System



	DPRR4009
COLOR	Blue

ZENEX SIMPLE KIT Instruments

Parallel Pin

- Used for confirmation of drilling depth and path
- Available to use after drilling with Ø2.2 Drill and Ø3.0 drill
- Composition in the kit: PP352230 (1 ea) + PP402230 (2 ea)
- Material: Stainless Steel

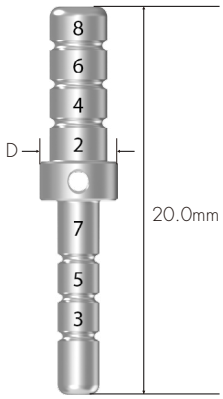

D (mm)	Ø3.5	Ø4.0	Ø5.0	Ø6.0
	PP352230	PP402230	PP502230	PP602230

Fixture Driver

- For Contra Angle: Directly attached to fixture by connecting to handpiece when using Implant motor
- For Wrench: Directly attached to fixure by using Torque Wrench
- Two-staged coloring enables measurement up to 5mm height at 1mm intervals
- Be sure to use after accurate connection because once used with incorrectly connected driver, it is impossible to remove fixture
- Be sure to use accurate fixture driver according to the system of fixture.

※ Fixture Driver for Narrow of ZENEX MULTI I-System: Same with Mini of ZENEX T-System (**Optional**)

- Material: Stainless Steel (TrimRite®)

I-System



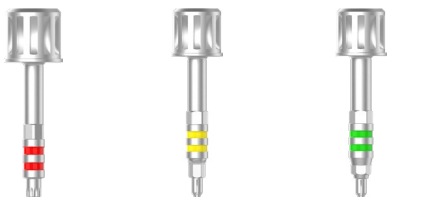

	Contra Angle			Wrench		
Short	FDCSX17S	FDCTM21S	FDCSR25S	FDRSX17S	FDRTM21S	FDRSR25S
Long	FDCSX17L	FDCTM21L	FDCSR25L	FDRSX17L	FDRTM21L	FDRSR25L
COLOR	Red	Yellow	Green	Red	Yellow	Green

- For ZENEX MULTI I-System (based on connection): Narrow, Mini, Regualr & Wide
- For ZENEX PLUS I-System (based on connection): X-Narrow, Mini, Regualr & Wide

T-System

	Contra Angle		Wrench	
				
	M	R/W	M	R/W
Short	FDCTM21S	FDCTR25S	FDRTM21S	FDRTR25S
Long	FDCTM21L	FDCTR25L	FDRTM21L	FDRTR25L
COLOR	Yellow	Black	Yellow	Black

R-System

	Contra Angle	Wrench
		
	M/R/W	M/R/W
Short	FDCRR23S	FDRRR23S
Long	FDCRR23L	FDRRR23L
COLOR	Blue	Blue

ZENEX SIMPLE KIT Instruments

1.2 Hex Driver

- Driver for connecting with Torque Wrench
- Used for connecting to cover screw and surgical instrument with 1.2 Hex
- Follow recommended tightening torque calculation value
- Be sure to check transformation of Hex tip before use
- Product Code in the Kit: HEDR1215
- Material: Stainless Steel+Titanium alloy

L (mm)	10.0	15.0
	HEDR1210	HEDR1215

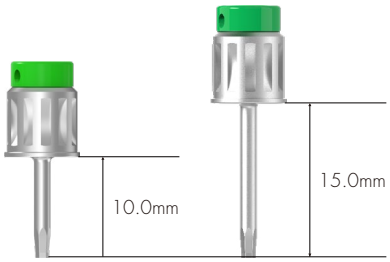

Torque Wrench

- Used for placing fixture and tightening implant abutments and screws
- Confirm torque calculation value by pulling the bar to be aligned with the marked line
- Recommended to use by pressing head to prevent detachment of Torque Wrench and surgical instruments
- Material: Stainless Steel



TW60B

Depth Gauge

- Measuring drilling depth
- Measurable depth: 6~20mm
- Material: Titanium alloy

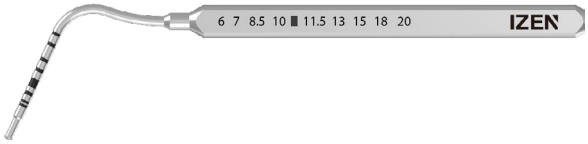

DG1720

Drilling Sequence

Ø 3.5mm Fixture

(ZENEX MULTI & PLUS T-System Mini)

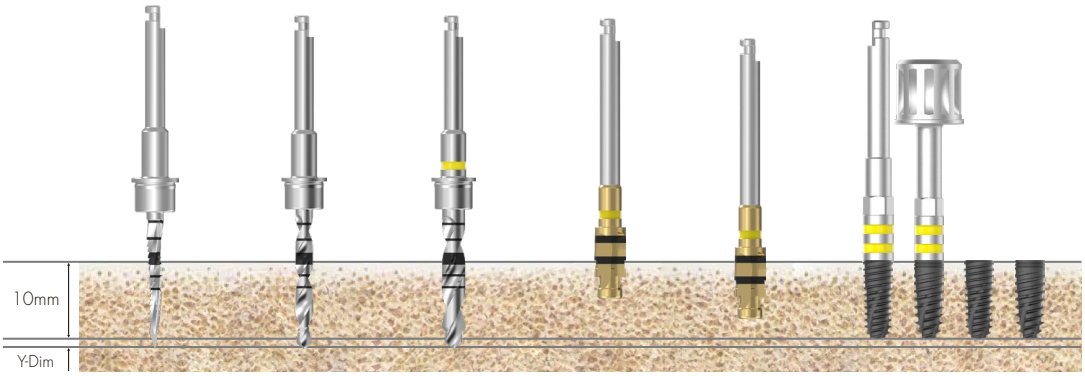

Bone Quality	Guide Drill	Twist Drill (Ø2.2)	Twist Drill (Ø3.0)	Cortical Drill (Lower Line)	Cortical Drill (Upper Line)	Ø3.5 Fixture
Soft	▶	▶	▶			
Normal	▶	▶	▶	▶		Implant Placement
Hard	▶	▶	▶		▶	

Ø 4.0mm Fixture

(ZENEX MULTI & PLUS T-System Regular)

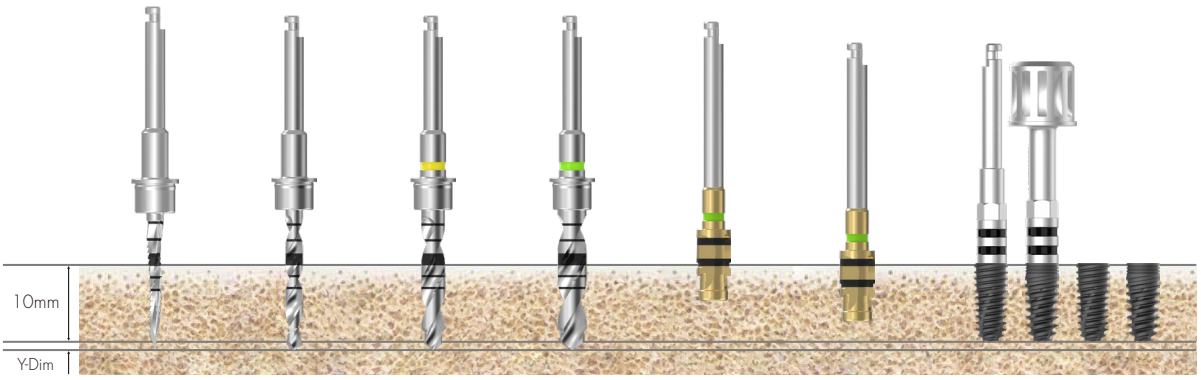

Bone Quality	Guide Drill	Twist Drill (Ø2.2)	Twist Drill (Ø3.0)	Twist Drill (Ø3.6)	Cortical Drill (Lower Line)	Cortical Drill (Upper Line)	Ø4.0 Fixture
Soft	▶	▶	▶	▶			
Normal	▶	▶	▶	▶	▶		Implant Placement
Hard	▶	▶	▶	▶		▶	

Drilling Sequence

Ø 4.5mm Fixture

(ZENEX MULTI & PLUS T-System Regular)

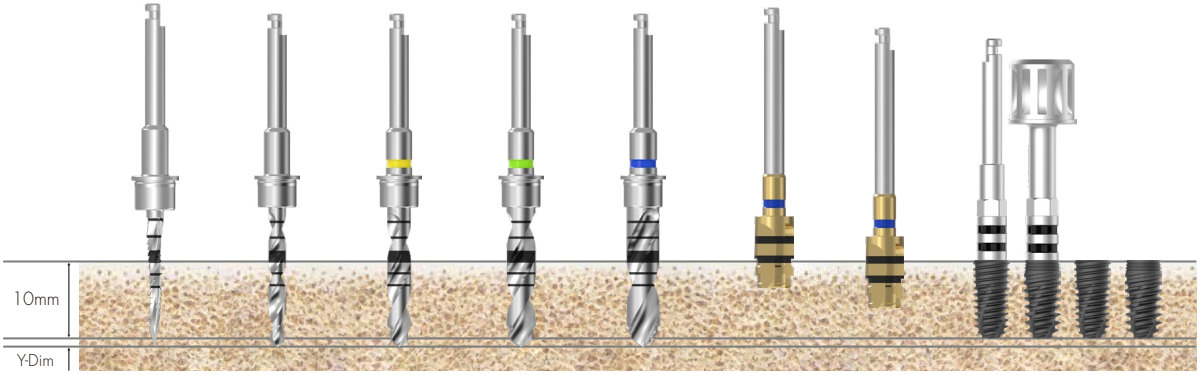

Bone Quality	Guide Drill	Twist Drill (Ø2.2)	Twist Drill (Ø3.0)	Twist Drill (Ø3.6)	Twist Drill (Ø4.1)	Cortical Drill (Lower Line)	Cortical Drill (Upper Line)	Ø4.5 Fixture
Soft	▶	▶	▶	▶	▶			
Normal	▶	▶	▶	▶	▶	▶		Implant Placement
Hard	▶	▶	▶	▶	▶		▶	

Ø 5.0mm Fixture

(ZENEX MULTI & PLUS T-System Wide)

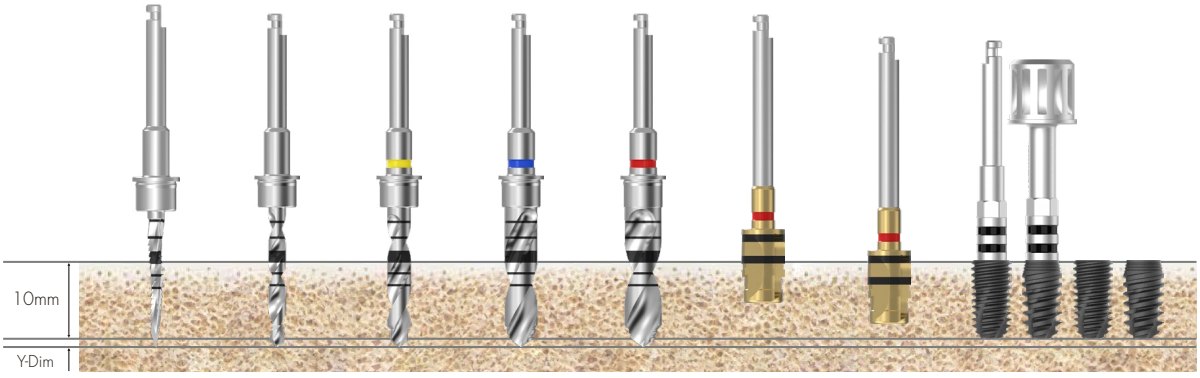

Bone Quality	Guide Drill	Twist Drill (Ø2.2)	Twist Drill (Ø3.0)	Twist Drill (Ø4.1)	Twist Drill (Ø4.6)	Cortical Drill (Lower Line)	Cortical Drill (Upper Line)	Ø5.0 Fixture
Soft	▶	▶	▶	▶	▶			
Normal	▶	▶	▶	▶	▶	▶		Implant Placement
Hard	▶	▶	▶	▶	▶		▶	

ZENEX EASY SURGERY KIT

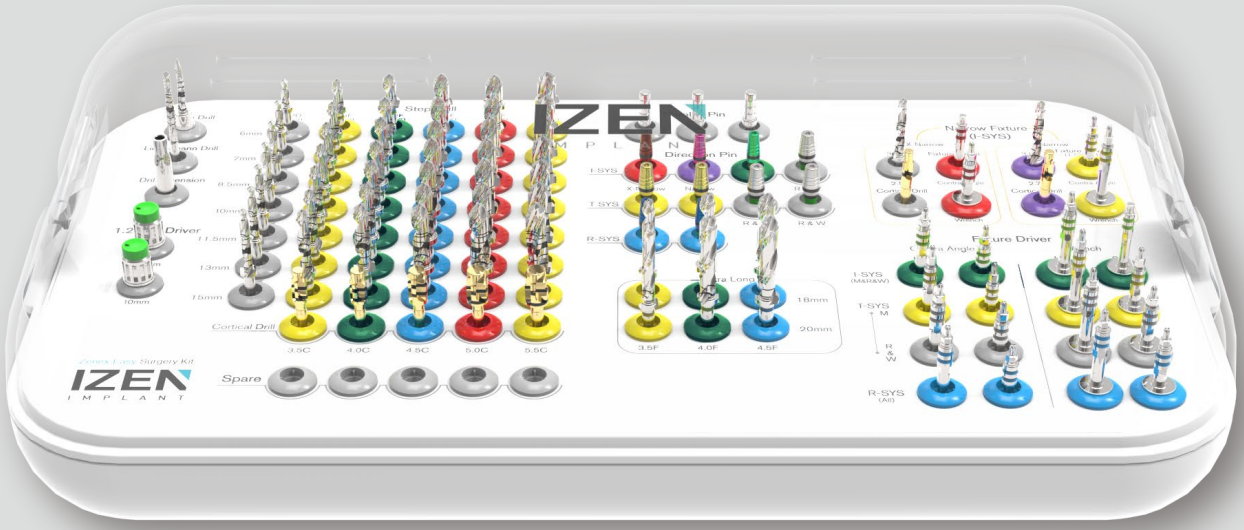

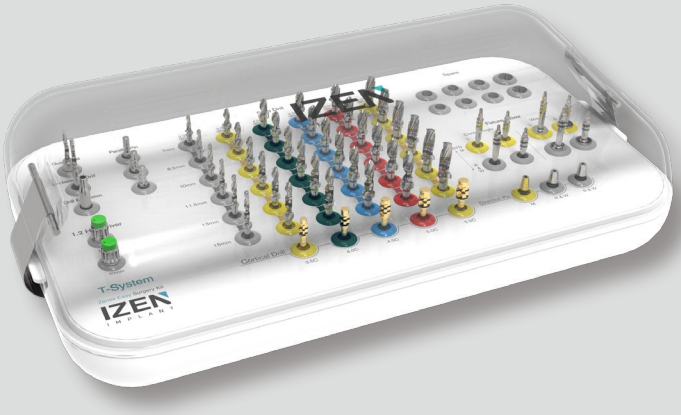

T-System

ZENEX EASY SURGERY KIT (ZENESKIT)

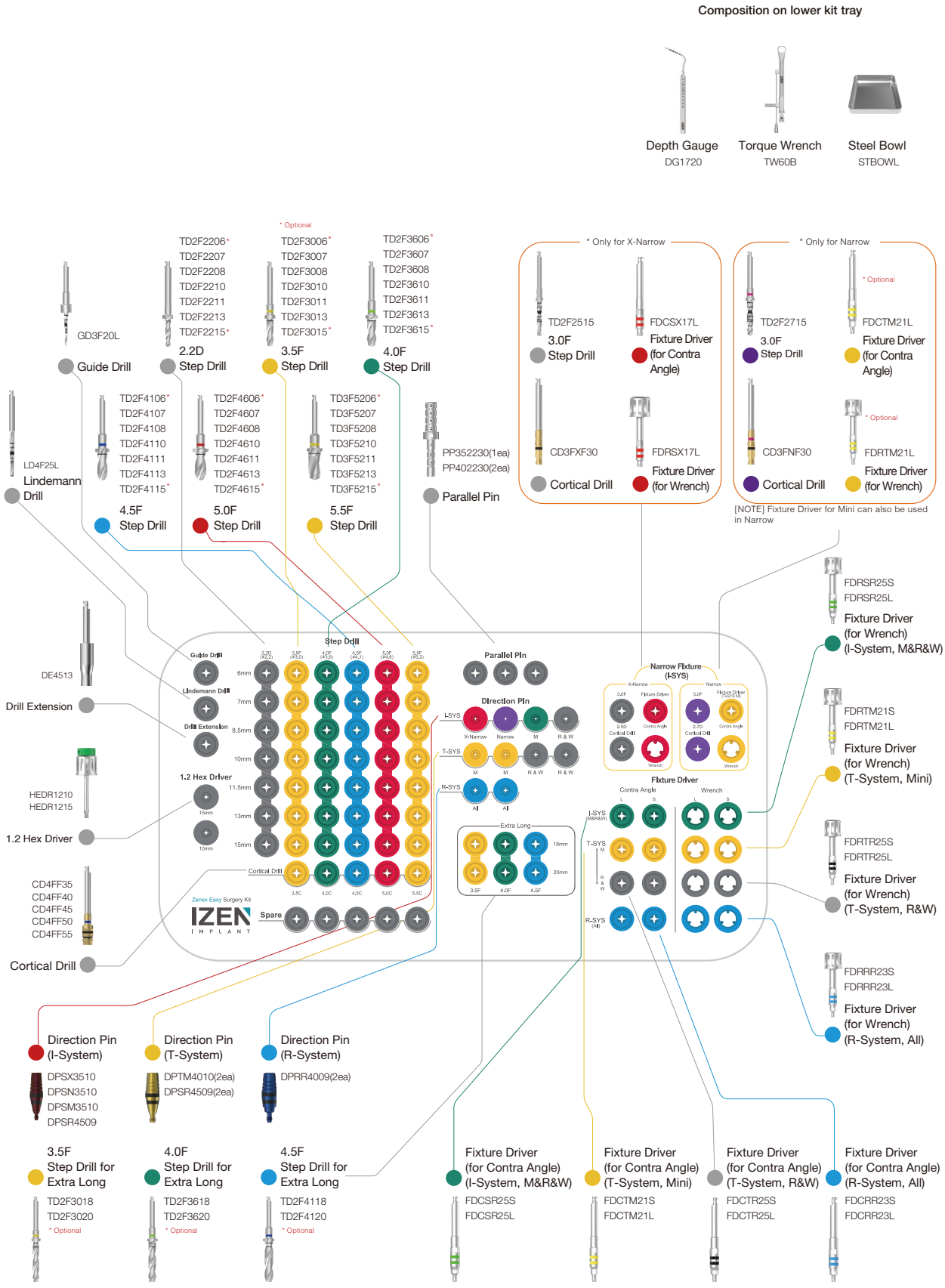

ZENEX EASY SURGERY KIT
T-System (ZENESTKIT)

Composition on lower kit tray



Depth Gauge
DG1720

Torque Wrench
TW60B

Steel Bowl
STBOWL

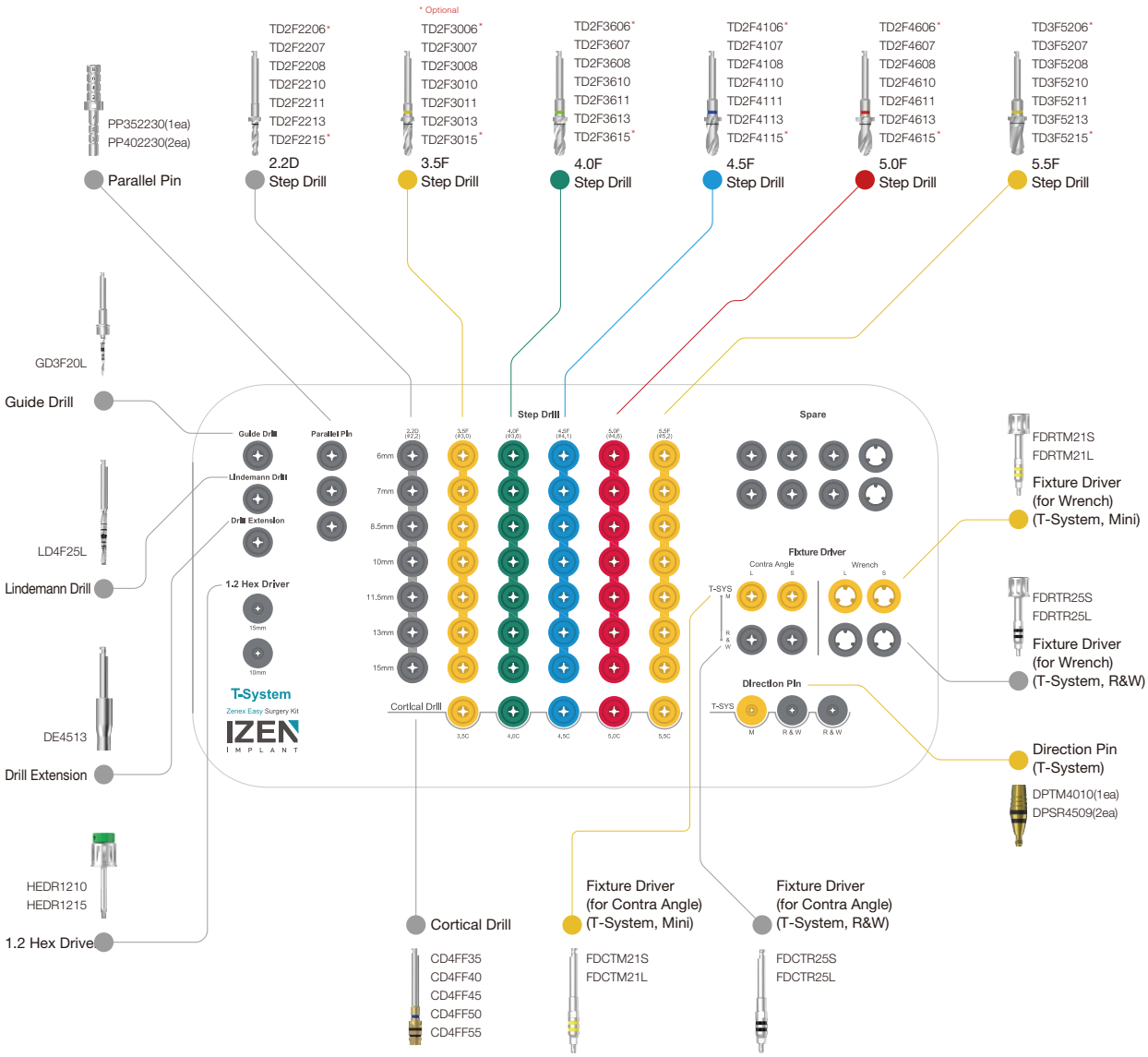

ZENEX EASY SURGERY KIT Instruments

Guide Drill

- Drill to mark base hole on the bone for easy initial drilling
- Available to control drilling depth by using with stopper
- Product Code in the Kit: GD3F20L
- Material: Stainless Steel (TrimRite®)

D1/D2 (mm)	Ø1.5 / Ø2.0
Short	GD3F20S
Long	GD3F20L

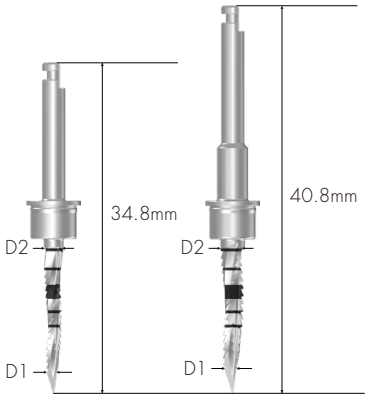

Lindemann Drill

- Outward blades allow side cutting during drilling
- Available to use when removing ridge part of extraction socket
- Product Code in the Kit: LD4F25L
- Material: Stainless Steel (TrimRite®)

D1/D2 (mm)	Ø1.5 / Ø2.0	Ø2.0 / Ø2.5
Short	LD4F20S	LD4F25S
Long	LD4F20L	LD4F25L

D1/D2 (mm)	Ø3.0 / Ø3.5
Medium	LD4F35M

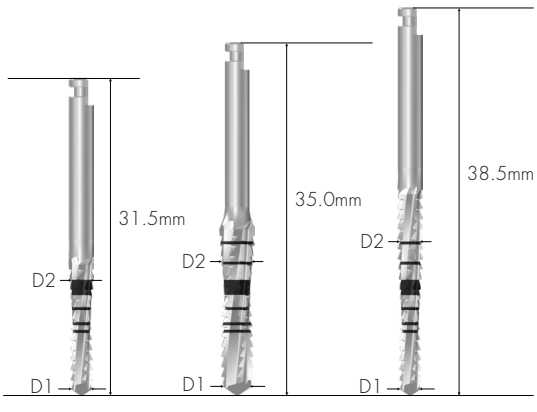

ZENEX EASY SURGERY KIT Instruments

Drill Extension

- Lengthen surgical instrument in use by connecting to drill and Implant motor
- Be sure to use after accurate connection to prevent product detachment or bending that connected to Drill Extension
- Material: Stainless Steel (TrimRite®) +Titanium alloy

DE4513

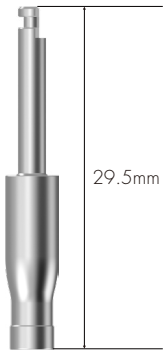

Step Drill

- Straight drill to shorten surgery steps
- As stopper is applied in the drill, secure to use although depth control may be difficult due to excellent cutting power
- Colored line on grip part of drill indicates diameter of drill and matching fixture size.
- Material: Stainless Steel (TrimRite®)

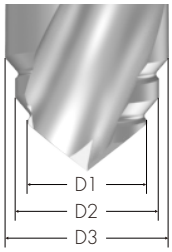

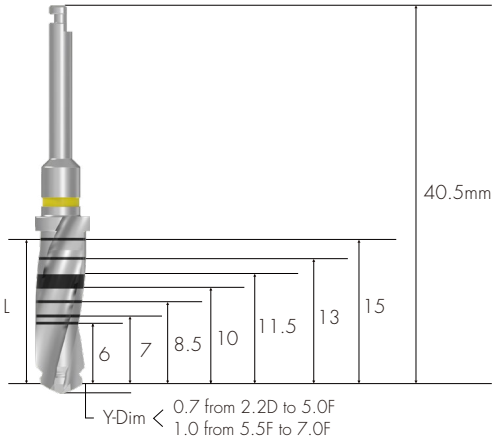

- Two kinds of step drill for X-Narrow (ZENEX PLUS I-System) & Narrow (ZENEX MULTI I-System) are included in the Kit.





L (mm) \ D1/D2/D3 (mm)	X-Narrow 3.0F (Ø2.2 / Ø2.5)	Narrow 3.0F (Ø2.2 / Ø2.7)
15.0	TD2F2515	TD2F2715

Step Drill

* Optional

L (mm) \ D1/D2/D3 (mm)	2.2D (Ø1.8 / Ø2.2)	3.5F (Ø2.2 / Ø3.0)	4.0F (Ø3.0 / Ø3.6)
6.0	TD2F2206 *	TD2F3006 *	TD2F3606 *
7.0	TD2F2207	TD2F3007	TD2F3607
8.5	TD2F2208	TD2F3008	TD2F3608
10.0	TD2F2210	TD2F3010	TD2F3610
11.5	TD2F2211	TD2F3011	TD2F3611
13.0	TD2F2213	TD2F3013	TD2F3613
15.0	TD2F2215 *	TD2F3015 *	TD2F3615 *
18.0	-	TD2F3018 *	TD2F3618 *
20.0	-	TD2F3020 *	TD2F3620 *

L (mm) \ D1/D2/D3 (mm)	4.5F (Ø3.0 / Ø3.6 / Ø4.1)	5.0F (Ø3.0 / Ø4.1 / Ø4.6)	5.5F (Ø4.6 / Ø5.2)
6.0	TD2F4106 *	TD2F4606 *	TD3F5206 *
7.0	TD2F4107	TD2F4607	TD3F5207
8.5	TD2F4108	TD2F4608	TD3F5208
10.0	TD2F4110	TD2F4610	TD3F5210
11.5	TD2F4111	TD2F4611	TD3F5211
13.0	TD2F4113	TD2F4613	TD3F5213
15.0	TD2F4115 *	TD2F4615 *	TD3F5215 *
18.0	TD2F4118 *	-	-
20.0	TD2F4120 *	-	-

ZENEX EASY SURGERY KIT Instruments

Cortical Drill

- Drill used for removing cortical bone from hard bone
- Drill to the bottom of each marking line
- The lower marking line is for drilling on normal bone and the upper marking line is for drilling on hard bone
- Material: Stainless Steel (TrimRite®)

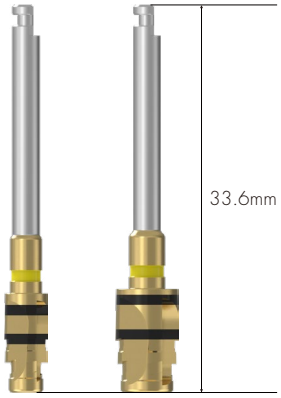

	3.0C (X-Narrow)	3.0C (Narrow)	3.5C	4.0C	4.5C	5.0C	5.5C
	CD3FXF30	CD3FNF30	CD4FF35	CD4FF40	CD4FF45	CD4FF50	CD4FF55
COLOR	None	Purple	Yellow	Green	Blue	Red	Yellow

Direction Pin

- Confirm gingiva height and path after implant placement
- DPSR4509: Available to use in case of ZENEX I-System (Regular & Wide) and ZENEX T-System (Regular & Wide)
- Material: Titanium alloy

I-System



	DPSX3510	DPSN3510	DPSM3510	DPSR4509
COLOR	Red	Purple	Green	Metal

- For ZENEX MULTI I-System (based on connection): Narrow, Mini, Regualr & Wide
- For ZENEX PLUS I-System (based on connection): X-Narrow, Mini, Regualr & Wide

T-System

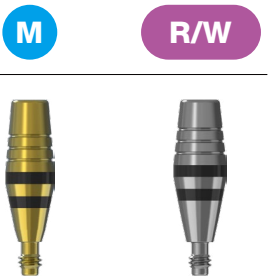

	DPTM4010	DPSR4509
COLOR	Yellow	Metal

R-System



	DPRR4009
COLOR	Blue

Parallel Pin

- Used for confirmation of drilling depth and path
- Available to use after drilling with Ø2.2 Drill and Ø3.0 drill
- Composition in the kit: PP352230 (1 ea) + PP402230 (2 ea)
- Material: Stainless Steel

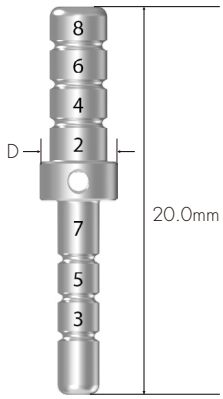

D (mm)	Ø3.5	Ø4.0	Ø5.0	Ø6.0
	PP352230	PP402230	PP502230	PP602230

Fixture Driver

- For Contra Angle: Directly attached to fixture by connecting to handpiece when using Implant motor
- For Wrench: Directly attached to fixure by using Torque Wrench
- Two-staged coloring enables measurement up to 5mm height at 1mm intervals
- Be sure to use after accurate connection because once used with incorrectly connected driver, it is impossible to remove fixture
- Be sure to use accurate fixture driver according to the system of fixture.

※ Fixture Driver for Narrow of ZENEX MULTI I-System: Same with Mini of ZENEX T-System (**Optional**)

- Material: Stainless Steel (TrimRite®)

I-System

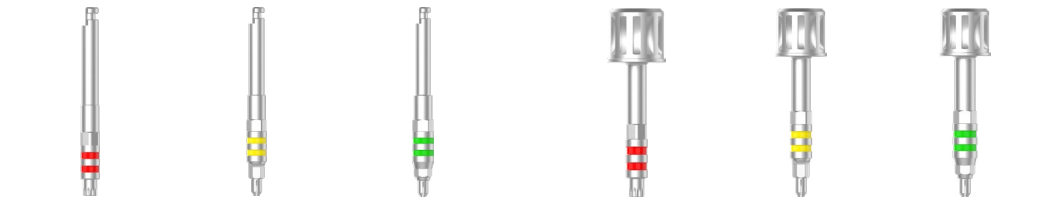

	Contra Angle			Wrench		
Short	FDCSX17S	FDCTM21S	FDCSR25S	FDRSX17S	FDRTM21S	FDRSR25S
Long	FDCSX17L	FDCTM21L	FDCSR25L	FDRSX17L	FDRTM21L	FDRSR25L
COLOR	Red	Yellow	Green	Red	Yellow	Green

- For ZENEX MULTI I-System (based on connection): Narrow, Mini, Regualr & Wide
- For ZENEX PLUS I-System (based on connection): X-Narrow, Mini, Regualr & Wide

ZENEX EASY SURGERY KIT Instruments

T-System

	Contra Angle		Wrench	
				
	M	R/W	M	R/W
Short	FDCTM21S	FDCTR25S	FDRTM21S	FDRTR25S
Long	FDCTM21L	FDCTR25L	FDRTM21L	FDRTR25L
COLOR	Yellow	Black	Yellow	Black

R-System

	Contra Angle	Wrench
		
	M/R/W	M/R/W
Short	FDCRR23S	FDRRR23S
Long	FDCRR23L	FDRRR23L
COLOR	Blue	Blue

1.2 Hex Driver

- Driver for connecting with Torque Wrench
- Used for connecting to cover screw and surgical instrument with 1.2 Hex
- Follow recommended tightening torque calculation value
- Be sure to check transformation of Hex tip before use
- Material: Stainless Steel+Titanium alloy

L (mm)	10.0	15.0
	HEDR1210	HEDR1215

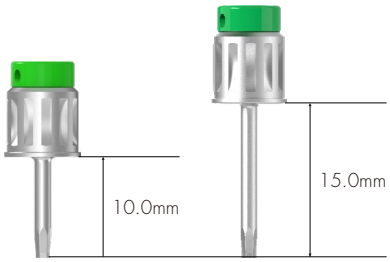

Torque Wrench

- Used for placing fixture and tightening implant abutments and screws
- Confirm torque calculation value by pulling the bar to be aligned with the marked line
- Recommended to use by pressing head to prevent detachment of Torque Wrench and surgical instruments
- Material: Stainless Steel



TW60B

ZENEX EASY SURGERY KIT Instruments

Depth Gauge

- Measuring drilling depth
- Measurable depth: 6~20mm
- Material: Titanium alloy

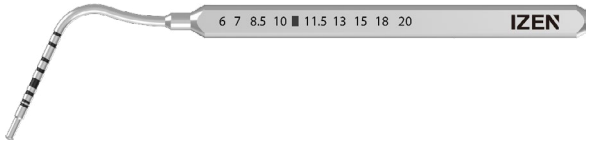

DG1720

Steel Bowl

- Used for cleaning surgery instruments
- Material: Stainless Steel



STBOWL

Drilling Sequence

Ø 3.5mm Fixture

(ZENEX MULTI & PLUS T-System Mini)

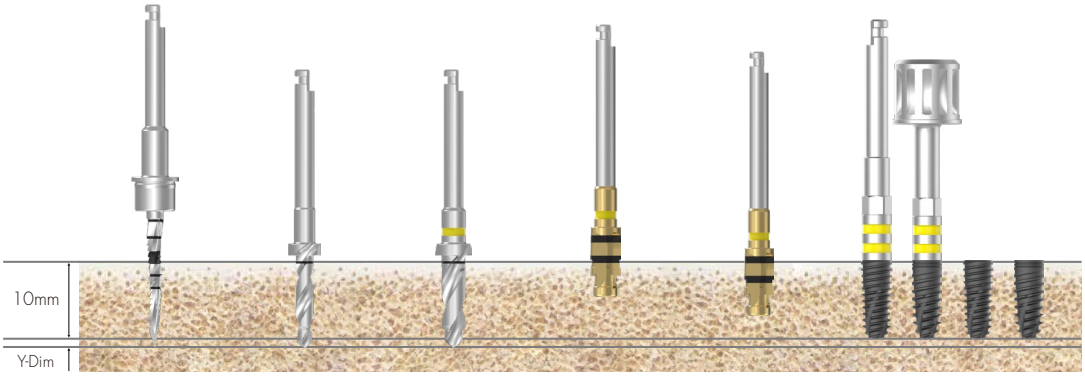

Bone Quality	Guide Drill	Step Drill (Ø2.2)	Step Drill (Ø3.0)	Cortical Drill (Lower Line)	Cortical Drill (Upper Line)	Ø3.5 Fixture
Soft	▶	▶	▶			
Normal	▶	▶	▶	▶		Implant Placement
Hard	▶	▶	▶		▶	

Ø 4.0mm Fixture

(ZENEX MULTI & PLUS T-System Regular)

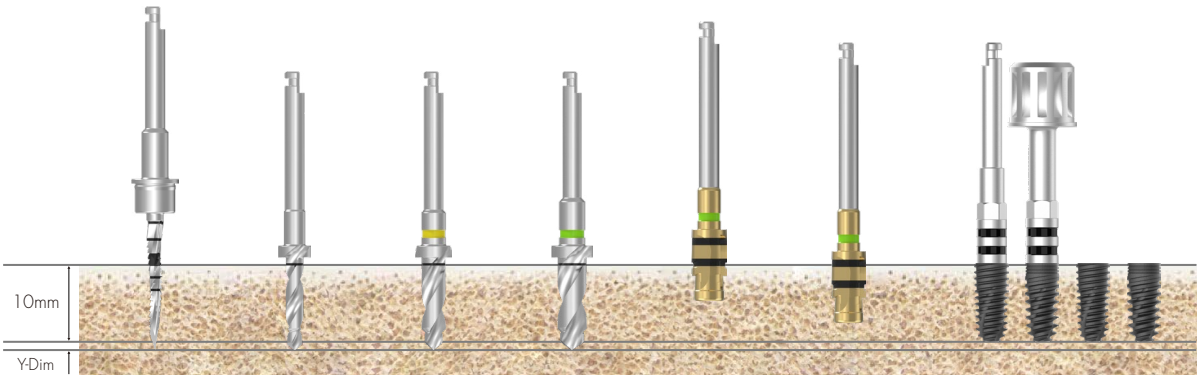

Bone Quality	Guide Drill	Step Drill (Ø2.2)	Step Drill (Ø3.0)	Step Drill (Ø3.6)	Cortical Drill (Lower Line)	Cortical Drill (Upper Line)	Ø4.0 Fixture
Soft	▶	▶	▶	▶			
Normal	▶	▶	▶	▶	▶		Implant Placement
Hard	▶	▶	▶	▶		▶	

Drilling Sequence

Ø 4.5mm Fixture

(ZENEX MULTI & PLUS T-System Regular)

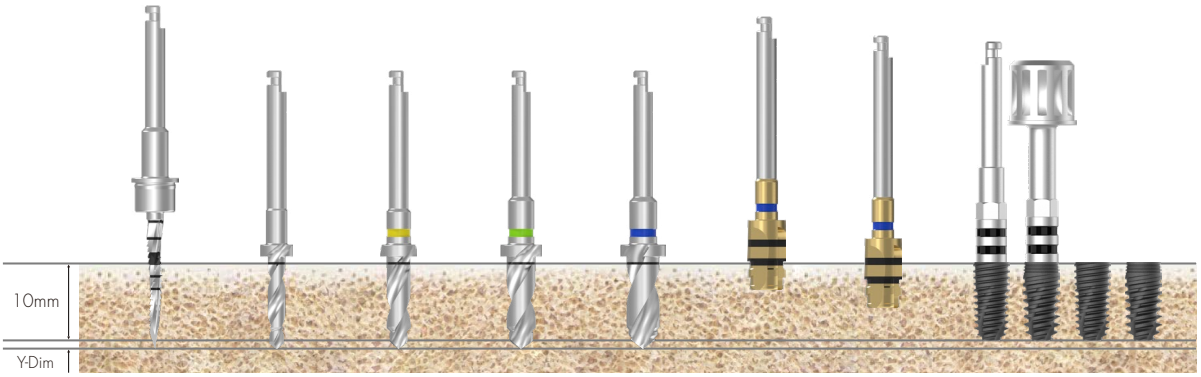

Bone Quality	Guide Drill	Step Drill (Ø2.2)	Step Drill (Ø3.0)	Step Drill (Ø3.6)	Step Drill (Ø4.1)	Cortical Drill (Lower Line)	Cortical Drill (Upper Line)	Ø4.5 Fixture
Soft	▶	▶	▶	▶	▶			
Normal	▶	▶	▶	▶	▶	▶		Implant Placement
Hard	▶	▶	▶	▶	▶		▶	

Ø 5.0mm Fixture

(ZENEX MULTI & PLUS T-System Wide)

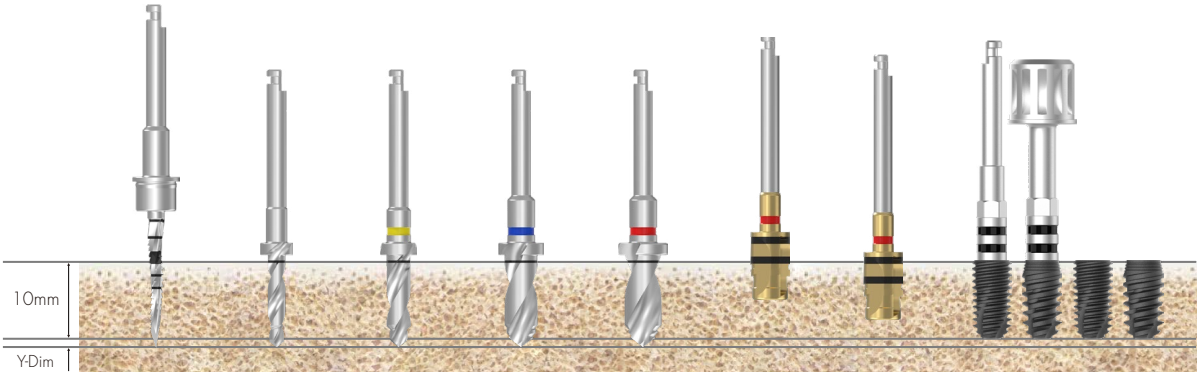

Bone Quality	Guide Drill	Step Drill (Ø2.2)	Step Drill (Ø3.0)	Step Drill (Ø4.1)	Step Drill (Ø4.6)	Cortical Drill (Lower Line)	Cortical Drill (Upper Line)	Ø5.0 Fixture
Soft	▶	▶	▶	▶	▶			
Normal	▶	▶	▶	▶	▶	▶		Implant Placement
Hard	▶	▶	▶	▶	▶		▶	

Drilling Sequence

Ø 5.5mm Fixture

(ZENEX MULTI & PLUS T-System Wide)

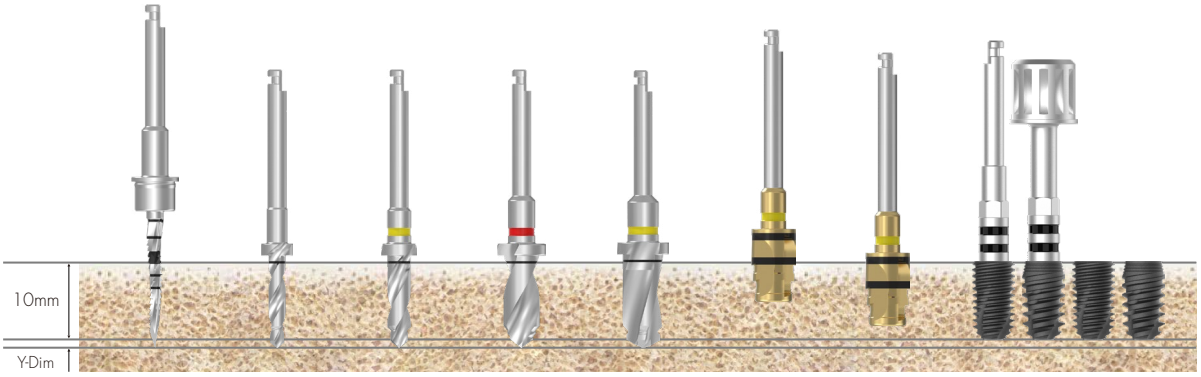

Bone Quality	Guide Drill	Step Drill (Ø2.2)	Step Drill (Ø3.0)	Step Drill (Ø4.6)	Step Drill (Ø5.2)	Cortical Drill (Lower Line)	Cortical Drill (Upper Line)	Ø5.5 Fixture
Soft	▶	▶	▶	▶	▶			
Normal	▶	▶	▶	▶	▶	▶		Implant Placement
Hard	▶	▶	▶	▶	▶		▶	

ZENEX SUPERWIDE KIT

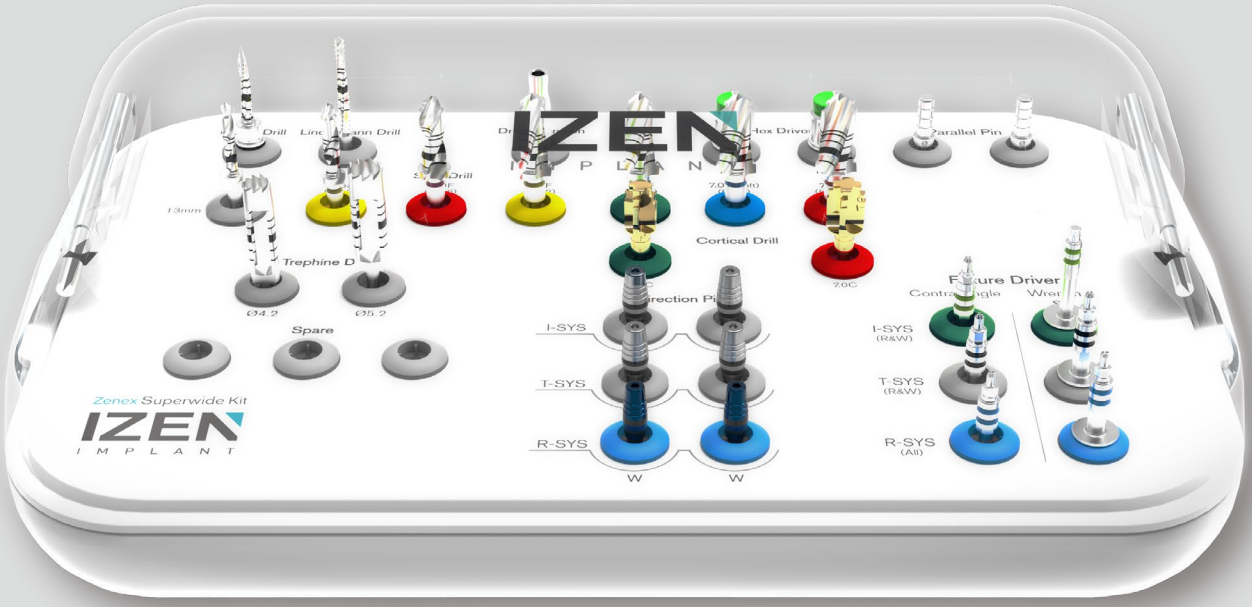

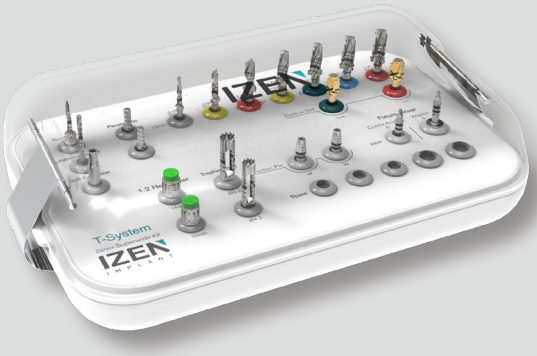

T-System

ZENEX SUPERWIDE KIT
(ZENSWKIT)

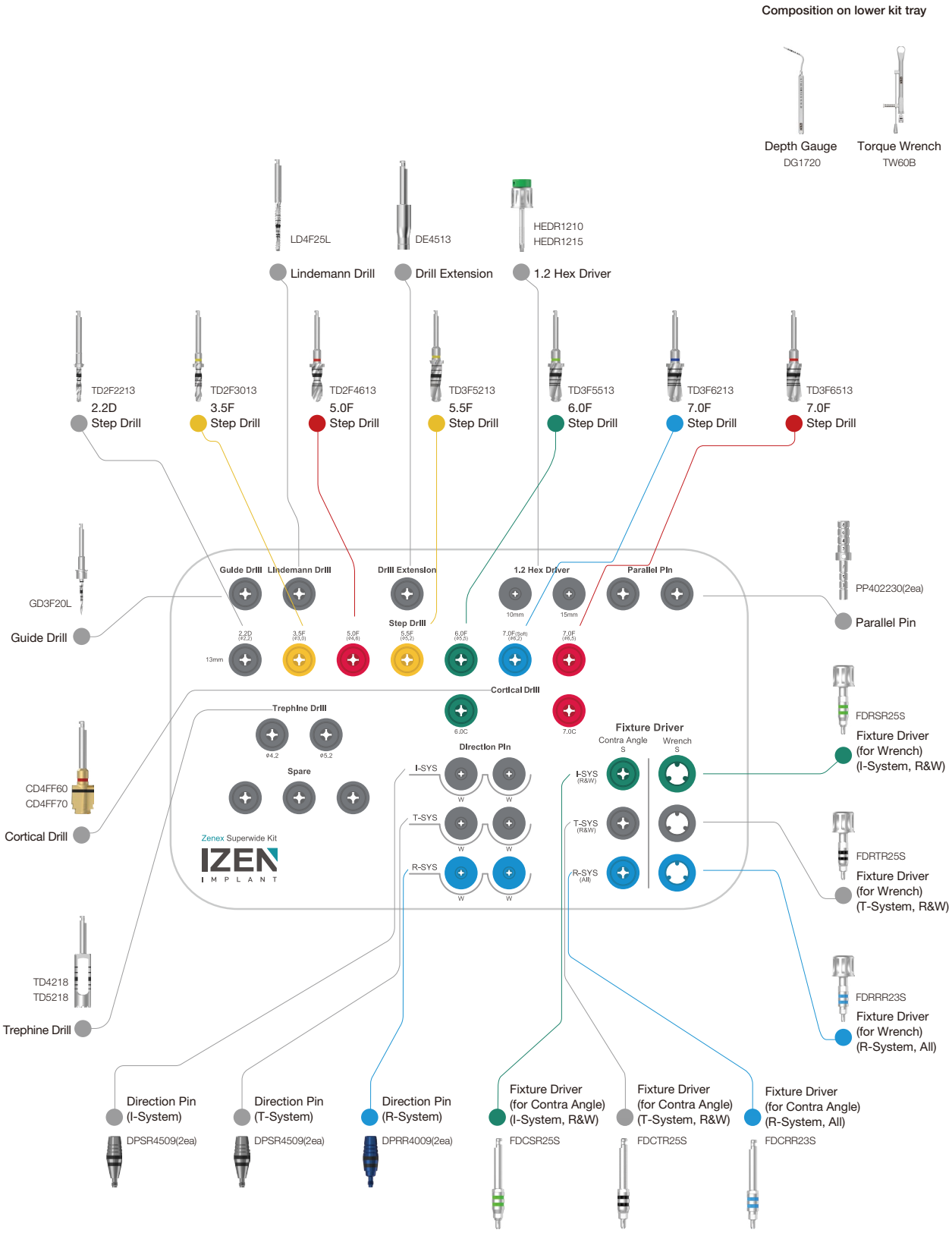

ZENEX SUPERWIDE KIT
T-System (ZENSWTKIT)

Composition on lower kit tray

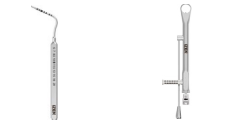

Depth Gauge
DG1720

Torque Wrench
TW60B

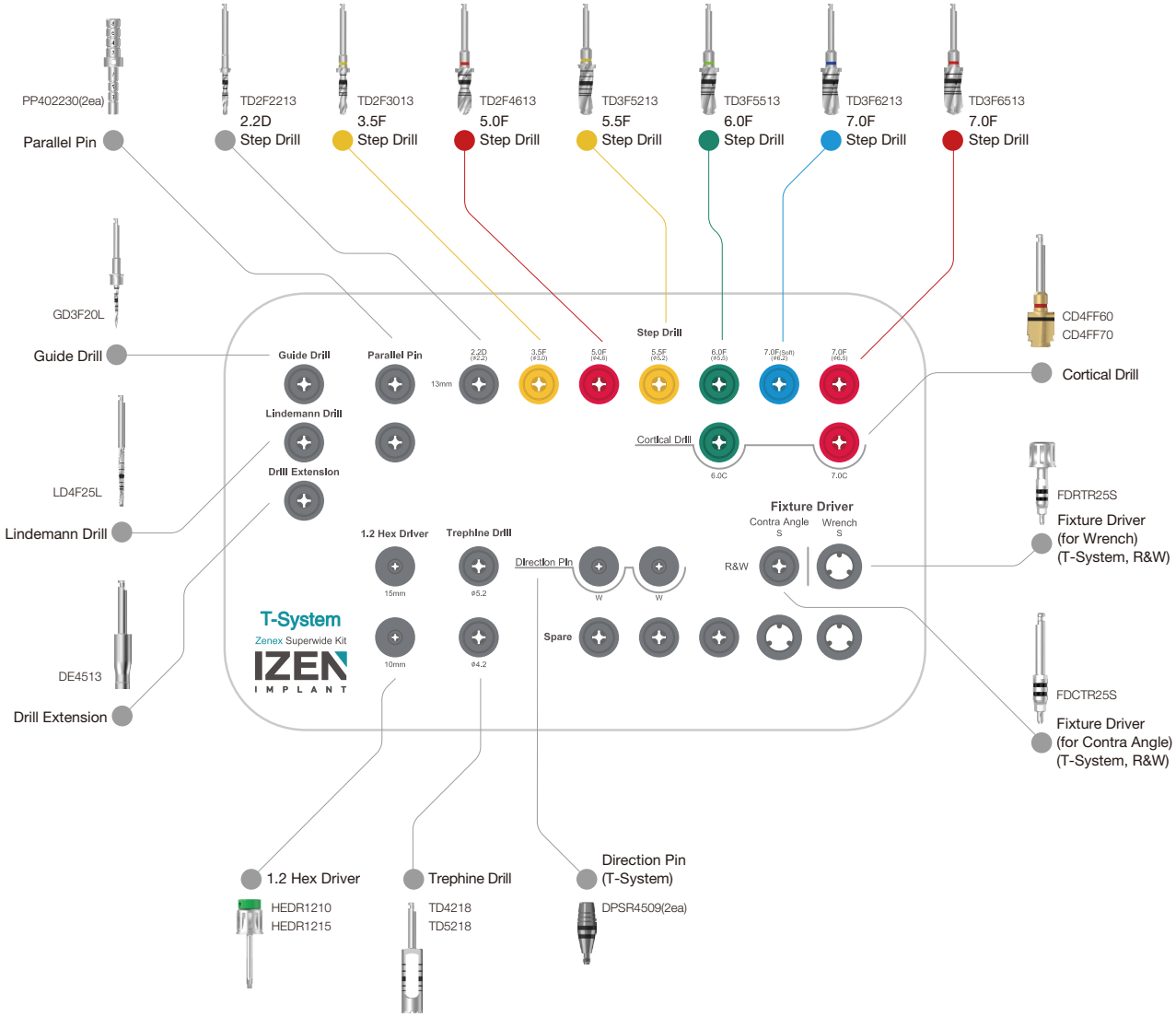

ZENEX SUPERWIDE KIT Instruments

Guide Drill

- Drill to mark base hole on the bone for easy initial drilling
- Available to control drilling depth by using with stopper
- Product Code in the Kit: GD3F20L
- Material: Stainless Steel (TrimRite®)

D1/D2 (mm)	Ø1.5 / Ø2.0
Short	GD3F20S
Long	GD3F20L

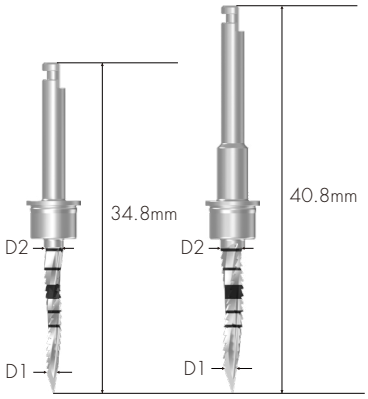

Lindemann Drill

- Outward blades allow side cutting during drilling
- Available to use when removing ridge part of extraction socket
- Product Code in the Kit: LD4F25L
- Material: Stainless Steel (TrimRite®)

D1/D2 (mm)	Ø1.5 / Ø2.0	Ø2.0 / Ø2.5
Short	LD4F20S	LD4F25S
Long	LD4F20L	LD4F25L

D1/D2 (mm)	Ø3.0 / Ø3.5
Medium	LD4F35M

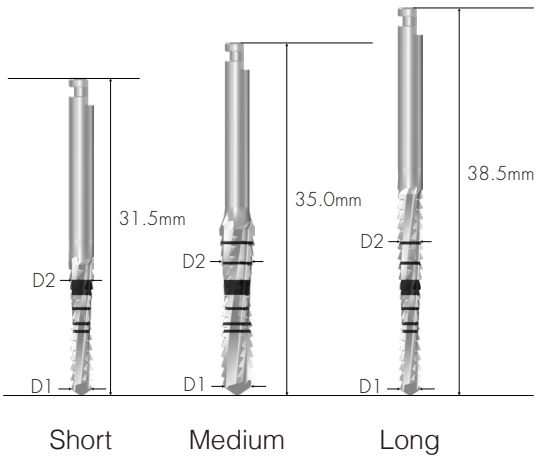

ZENEX SUPERWIDE KIT Instruments

Drill Extension

- Lengthen surgical instrument in use by connecting to drill and Implant motor
- Be sure to use after accurate connection to prevent product detachment or bending that connected to Drill Extension
- Material: Stainless Steel (TrimRite®) +Titanium alloy

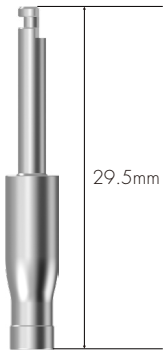

DE4513

Step Drill

- Straight drill to shorten surgery steps
- As stopper is applied in the drill, secure to use although depth control may be difficult due to excellent cutting power
- Colored line on grip part of drill indicates diameter of drill and matching fixture size.
- The length of 13mm step drill is applied only in the kit.

※ TD3F6213: Only use for drilling on soft bone when Ø 7.0 fixture is placed.

- Material: Stainless Steel (TrimRite®)

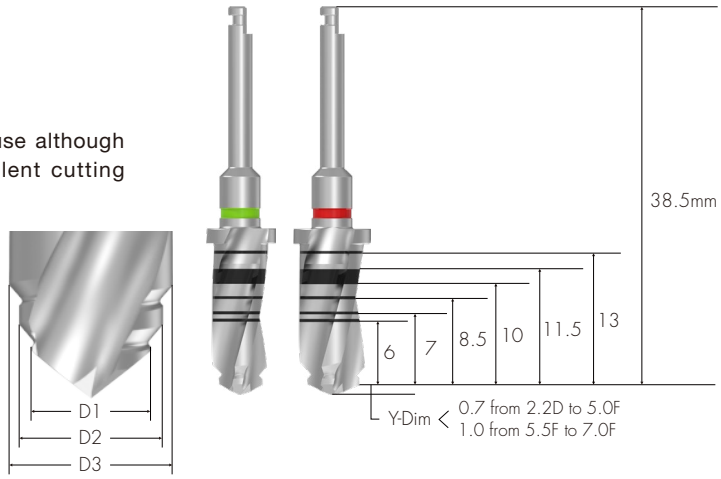

D1/D2/D3 (mm)	2.2D (Ø1.8 / Ø2.2)	3.5F (Ø2.2 / Ø3.0)	5.0F (Ø3.0 / Ø4.1 / Ø4.6)
	TD2F2213	TD2F3013	TD2F4613

D1/D2/D3 (mm)	5.5F (Ø4.6 / Ø5.2)	6.0F (Ø4.6 / Ø5.5)	7.0F (Ø5.5 / Ø6.2)
	TD3F5213	TD3F5513	TD3F6213

D1/D2/D3 (mm)	7.0F (Ø5.5 / Ø6.5)
	TD3F6513

Cortical Drill

- Drill used for removing cortical bone from hard bone
- Drill to the bottom of each marking line
- In case of Superwide fixture placement, use only for hard bone case.
- Material: Stainless Steel (TrimRite®)

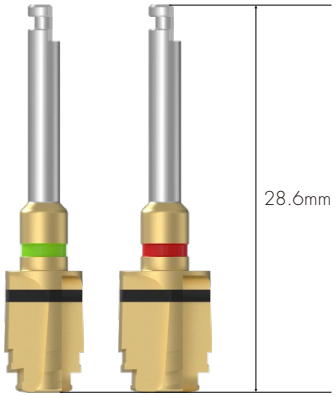

	6.0C	7.0C
	CD4FF60	CD4FF70
COLOR	Green	Red

Direction Pin

- Confirm gingiva height and path after implant placement
- DPSR4509: Available to use in case of ZENEX I-System (Regular & Wide) and ZENEX T-System (Regular & Wide)
- 2 pins of each system are included in the kit, in accordance with fixture system.
  The user may choose the product, matching with the system
- Material: Titanium alloy

I-System	T-System	R-System
		
DPSR4509	DPSR4509	DPRR4009
COLOR Metal	COLOR Metal	COLOR Blue

ZENEX SUPERWIDE KIT Instruments

Parallel Pin

- Used for confirmation of drilling depth and path
- Available to use after drilling with Ø2.2 Drill and Ø3.0 drill
- Composition in the kit: PP402230 (2 ea)
- Material: Stainless Steel

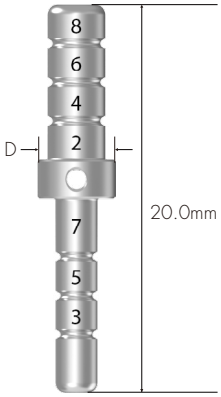

D (mm)	Ø3.5	Ø4.0	Ø5.0	Ø6.0
	PP352230	PP402230	PP502230	PP602230

Fixture Driver

- For Contra Angle: Directly attached to fixture by connecting to handpiece when using Implant motor
- For Wrench: Directly attached to fixure by using Torque Wrench
- Two-staged coloring enables measurement up to 5mm height at 1mm intervals
- Be sure to use after accurate connection because once used with incorrectly connected driver, it is impossible to remove fixture
- Be sure to use accurate fixture driver according to the system of fixture.
- Short type of fixture driver is included only
- Material: Stainless Steel (TrimRite®)

I-System ※ Only for I-System

	Contra Angle	Wrench
		
	M/R/W	M/R/W
Short	FDCSR25S	FDRSR25S
COLOR	Green	Green

T-System ※ Only for T-System

	Contra Angle	Wrench
		
	R/W	R/W
Short	FDCTR25S	FDRTR25S
COLOR	Black	Black

R-System ※ Only for R-System

	Contra Angle	Wrench
		
	M/R/W	M/R/W
Short	FDCRR23S	FDRRR23S
COLOR	Blue	Blue

ZENEX SUPERWIDE KIT Instruments

1.2 Hex Driver

- Driver for connecting with Torque Wrench
- Used for connecting to cover screw and surgical instrument with 1.2 Hex
- Follow recommended tightening torque calculation value
- Be sure to check transformation of Hex tip before use
- Material: Stainless Steel+Titanium alloy

L (mm)	10.0	15.0
	HEDR1210	HEDR1215

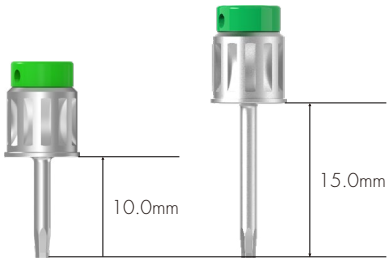

Torque Wrench

- Used for placing fixture and tightening implant abutments and screws
- Confirm torque calculation value by pulling the bar to be aligned with the marked line
- Recommended to use by pressing head to prevent detachment of Torque Wrench and surgical instruments
- Material: Stainless Steel



TW60B

Depth Gauge

- Measuring drilling depth
- Measurable depth: 6~20mm
- Material: Titanium alloy

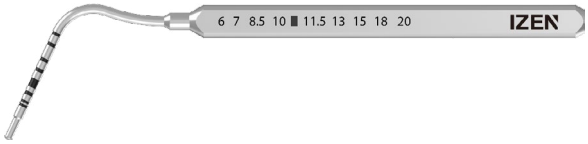

DG1720

Drilling Sequence

Ø 6.0mm Fixture

(ZENEX MULTI T-System Superwide)

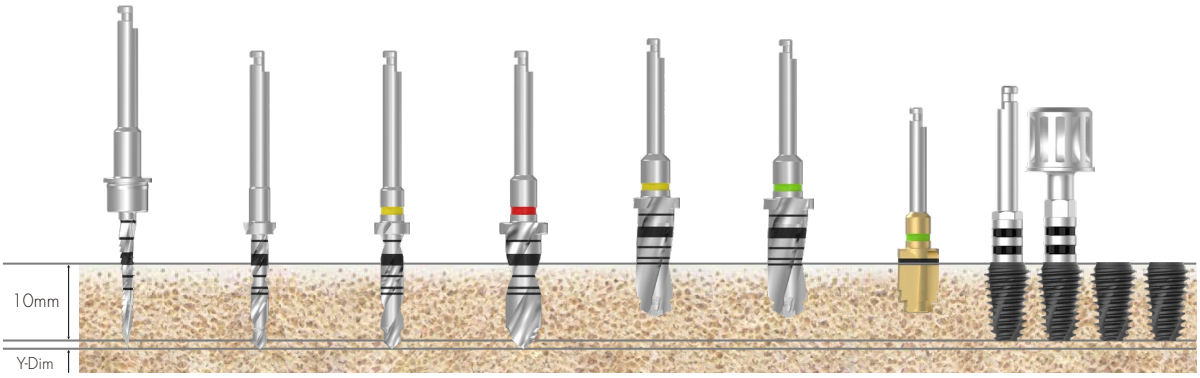

Bone Quality	Guide Drill	Step Drill (Ø2.2)	Step Drill (Ø3.0)	Step Drill (Ø4.6)	Step Drill (Ø5.2)	Step Drill (Ø5.5)	Cortical Drill	Ø6.0 Fixture
Soft	▶	▶	▶	▶	▶ (6mm)			
Normal	▶	▶	▶	▶		▶ (6mm)		Implant Placement
Hard	▶	▶	▶	▶		▶ (6mm)	▶	

Ø 7.0mm Fixture

(ZENEX MULTI T-System Superwide)

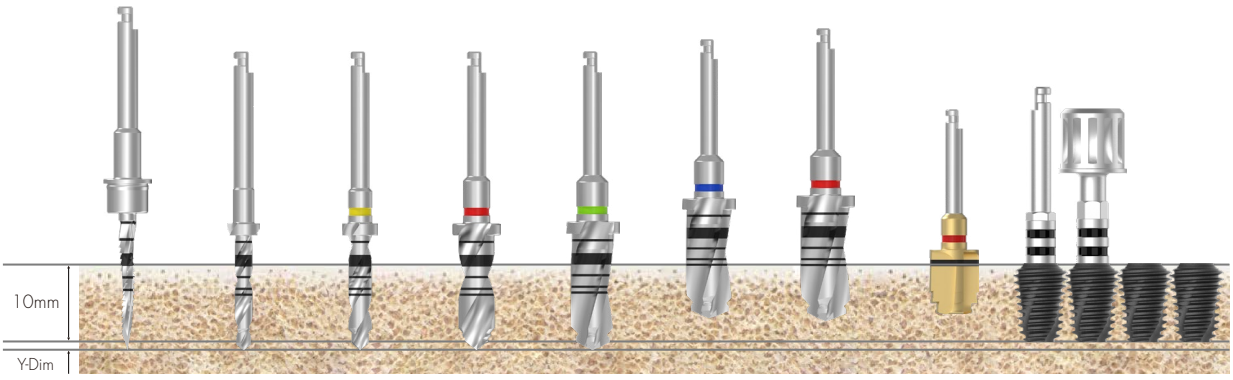

Bone Quality	Guide Drill	Step Drill (Ø2.2)	Step Drill (Ø3.0)	Step Drill (Ø4.6)	Step Drill (Ø5.5)	Step Drill (Ø6.2)	Step Drill (Ø6.5)	Cortical Drill	Ø7.0 Fixture
Soft	▶	▶	▶	▶	▶	▶ (6mm)			
Normal	▶	▶	▶	▶	▶		▶ (6mm)		Implant Placement
Hard	▶	▶	▶	▶	▶		▶ (6mm)	▶	

IZEN
IMPLANT

ZENEX PROSTHETIC KIT

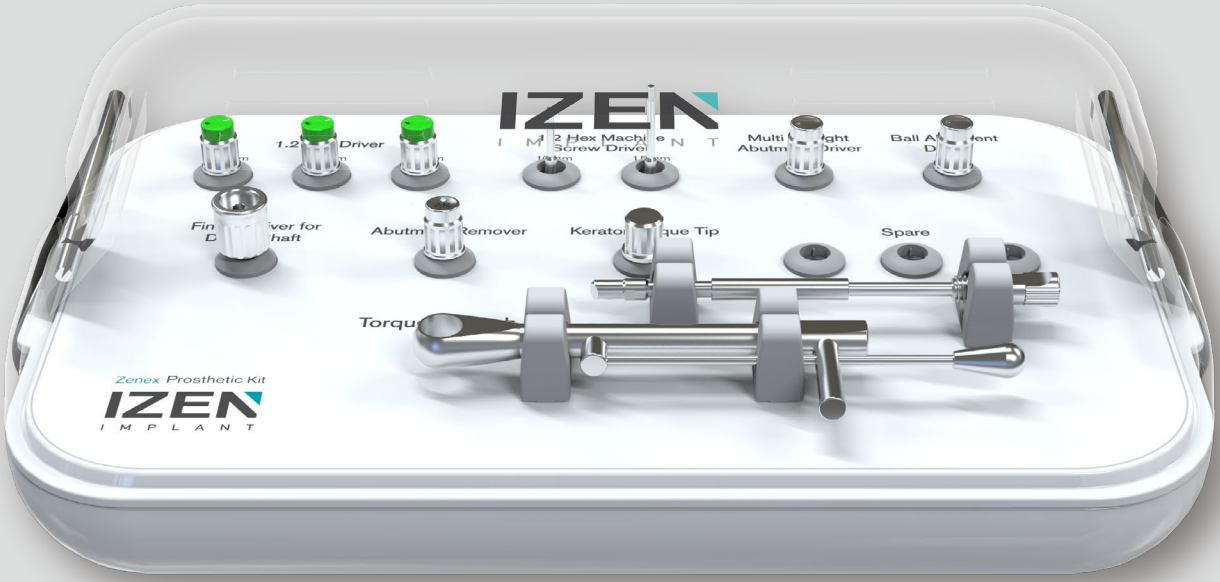

ZENEX PROSTHETIC KIT
(ZENPRKIT)

Composition on lower kit tray



Kerator Magic Tool
KMT002

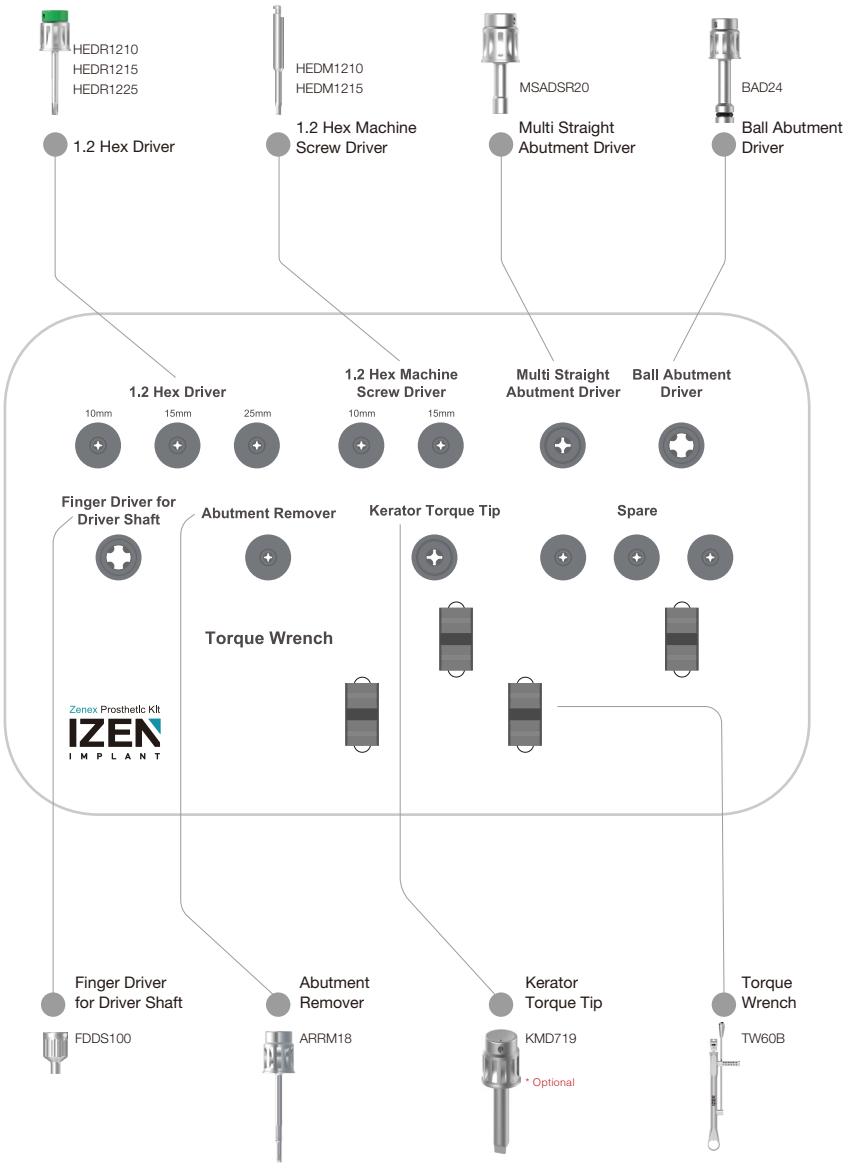

1.2 Hex Driver

- Driver for connecting with Torque Wrench
- Used for connecting to cover screw and surgical instrument with 1.2 Hex
- Follow recommended tightening torque calculation value
- Be sure to check transformation of Hex tip before use
- Material: Stainless Steel (TrimRite®) +Titanium alloy

L (mm)	10.0	15.0	25.0
	HEDR1210	HEDR1215	HEDR1225

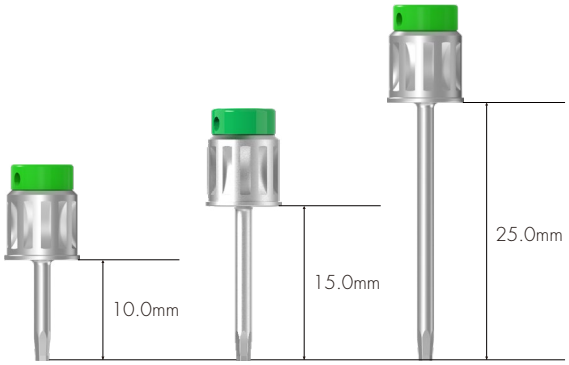

1.2 Hex Machine Screw Driver

- Driver for implant motor
- Implement holding instrument
- Available to use by hand when connected to Finger Driver for Driver Shaft
- Material: Stainless Steel (TrimRite®)

L (mm)	10.0	15.0
	HEDM1210	HEDM1215

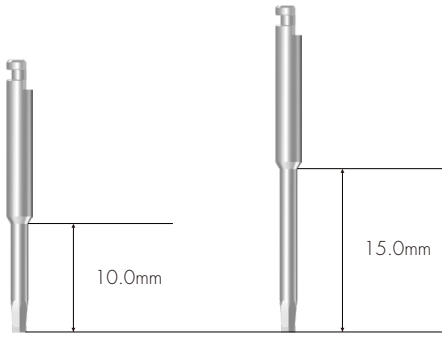

Abutment Remover

- Use for removing abutment when it is impossible to remove abutment by hands due to strong connection force.
- Remove Abutment by keep tightening the remover clockwise after removing abutment screw
- Material: Stainless Steel (TrimRite®) +Titanium alloy

※ R-System use only



ARRM18

Finger Driver for Driver Shaft

- Available to rotate with hand by connecting to every surgery instrument for motor
- Material: Stainless Steel (TrimRite®)



FDDS100

ZENEX PROSTHETIC KIT Instruments

Ball Abutment Driver

- Torque driver for Ball Abutment
- Material: Stainless Steel (TrimRite®)+Titanium alloy+Silicone



BAD24

Multi Straight Abutment Driver

- Torque driver for Multi Straight Abutment
- Material: Stainless Steel (TrimRite®)+Titanium alloy



MSADSR20

Torque Wrench

- Used for placing fixture and tightening implant abutments and screws
- Confirm torque calculation value by pulling the bar to be aligned with the marked line
- Recommended to use by pressing head to prevent detachment of Torque Wrench and surgical instruments
- Material: Stainless Steel



TW60B

Kerator Magic Tool

- Use to connect and remove replacement male on denture cap
- As separated into two pieces, it is easy for maintenance (Optional)



KMH002

Kerator Torque Tip

- Torque driver for Kerator Abutment (Optional)

Round Type



KMD719

IZEN
IMPLANT

ZENEX GUIDE KIT

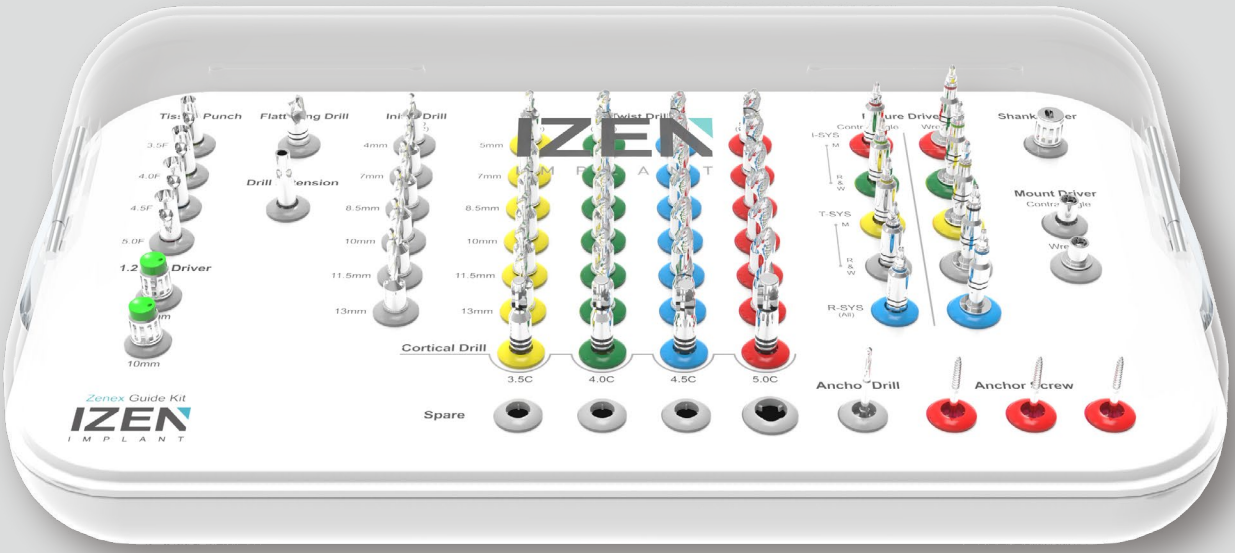



T-System

ZENEX GUIDE KIT (ZENGUKIT)

Composition on lower kit tray



Depth Gauge
DG1720

Torque Wrench
TW60B

Steel Bowl
STBOWL

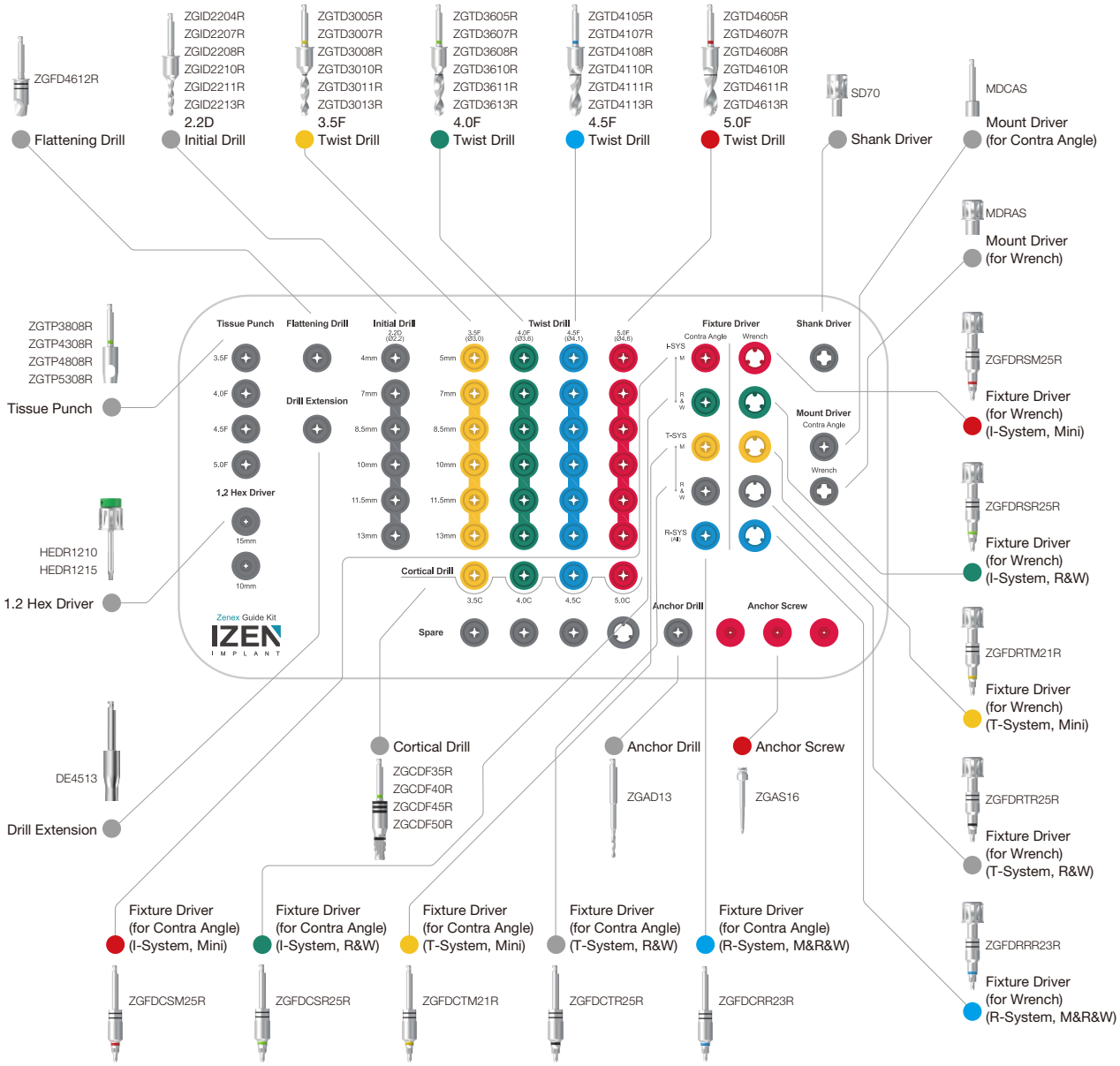

ZENEX GUIDE KIT
T-System (ZENGUTKIT)

Composition on lower kit tray



Depth Gauge
DG1720

Torque Wrench
TW60B

Steel Bowl
STBOWL

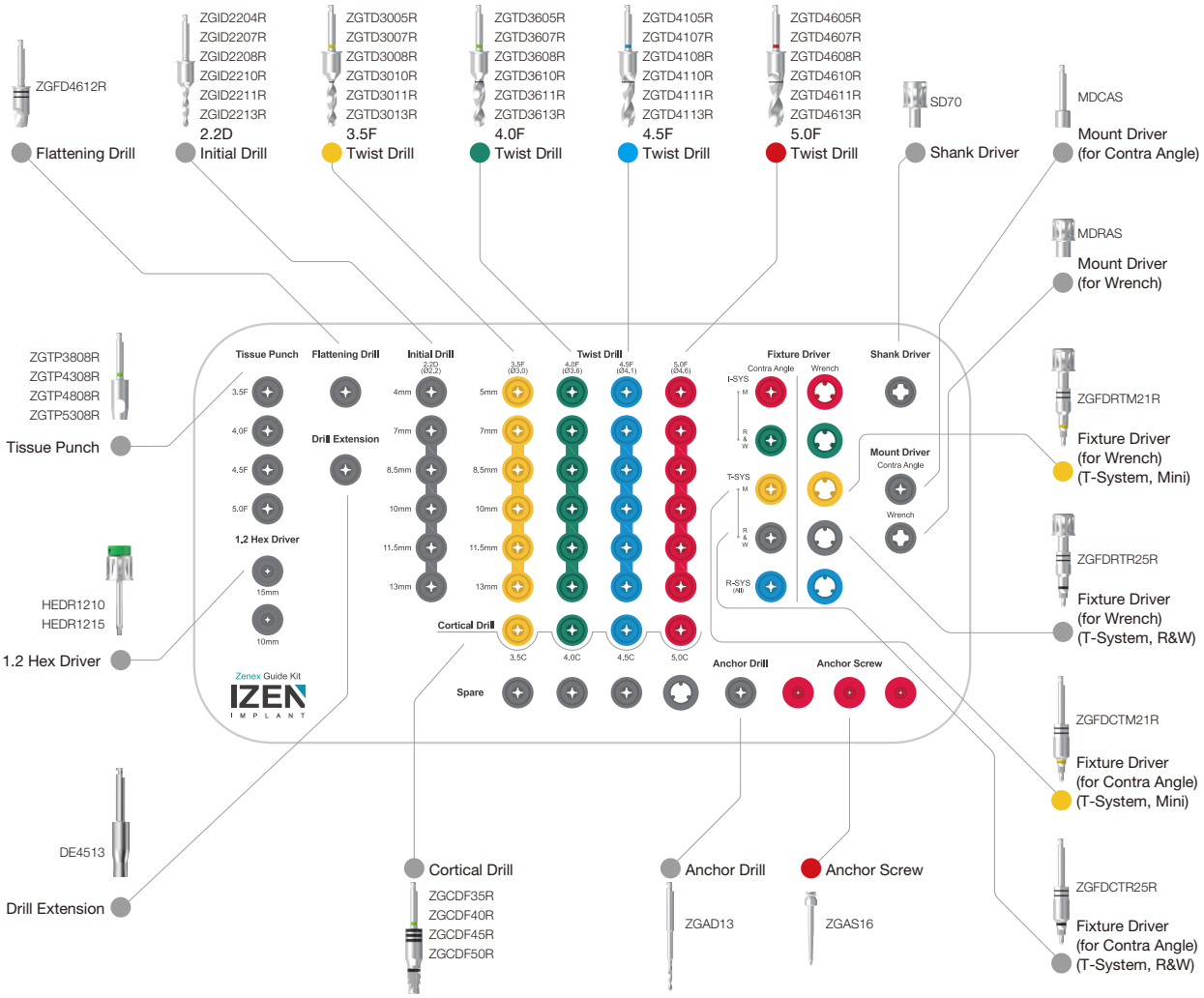

ZENEX GUIDE KIT Instruments

ZENEX Guide Tissue Punch

- Drill used for removing gingiva when using Surgical Guide
- Recommended speed: 1,200~1,500rpm
- Material: Stainless Steel (TrimRite®)
- Offest : 9mm, 10.5mm, 12mm



Fixture (Regular)	F3.5	F4.0	F4.5	F5.0
Tissue Punch	ZGTP3808R	ZGTP4308R	ZGTP4808R	ZGTP5308R
Diameter (mm)	Ø3.8	Ø4.3	Ø4.8	Ø5.3
Color	Yellow	Green	Blue	Red

ZENEX Guide Flattening Drill

- Used for narrow or uneven ridges
- Recommended to use before Initial Drill
- Stable cutting without splashing with multiple cutting edges
- Recommended speed: 1,200~1,500rpm
- There are products for each offset.
- Recommended to use offset-specific products for safety.
- Product Code in the Kit : ZGFD4612R
- Material: Stainless Steel (TrimRite®)

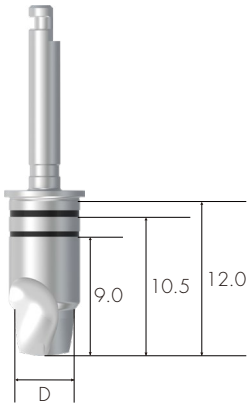

* Optional

Fixture (Regular)	F3.5	F4.0	F4.5	F5.0
Drill (Offset)		ZGFD4609R* (9mm)	ZGFD4610R* (10.5mm)	ZGFD4612R (12mm)
Diameter (mm)		Ø4.6		

ZENEX GUIDE KIT Instruments

Drill Extension

- Lengthen surgical instrument in use by connecting to drill and Implant motor
- Be sure to use after accurate connection to prevent product detachment or bending that connected to Drill Extension
- Material: Stainless Steel (TrimRite®) +Titanium alloy

DE4513

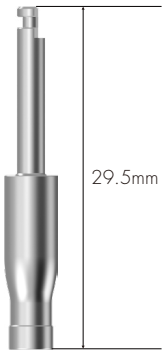

ZENEX Guide Initial Drill

- Drill to mark base hole on the bone for easy initial drilling after Tissue Punch when using Surgical Guide
- Recommended speed: 1,200~1,500rpm
- Material: Stainless Steel (TrimRite®)

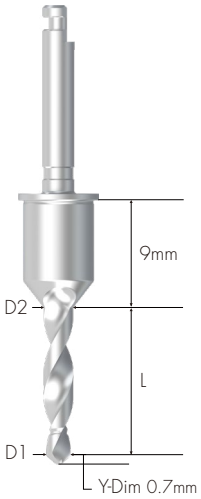

* Optional

L (mm) \ Fixture (Regular)	F3.5	F4.0	F4.5	F5.0
4.0		ZGID2204R		
7.0		ZGID2207R		
8.5		ZGID2208R		
10.0		ZGID2210R		
11.5		ZGID2211R		
13.0		ZGID2213R		
15.0		ZGID2215R*		
Diameter D1/D2 (mm)		Ø 1.8 / 2.2		

ZENEX Guide Twist Drill

- Straight drill to shorten surgery steps when using Surgical Guide
- Recommended speed: 1,200~1,500rpm
- Material: Stainless Steel (TrimRite®)

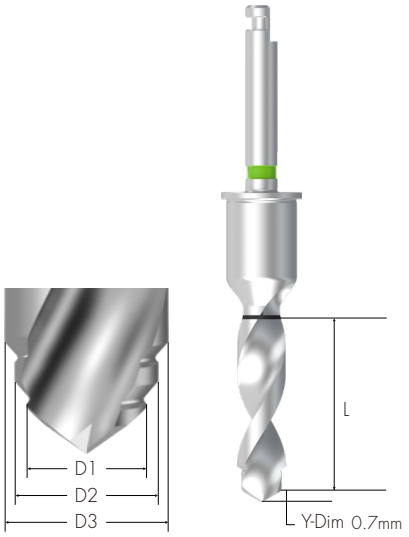

* Optional

L (mm) \ Fixture (Regular)	F3.5	F4.0	F4.5	F5.0
5.0	ZGTD3005R	ZGTD3605R	ZGTD4105R	ZGTD4605R
7.0	ZGTD3007R	ZGTD3607R	ZGTD4107R	ZGTD4607R
8.5	ZGTD3008R	ZGTD3608R	ZGTD4108R	ZGTD4608R
10.0	ZGTD3010R	ZGTD3610R	ZGTD4110R	ZGTD4610R
11.5	ZGTD3011R	ZGTD3611R	ZGTD4111R	ZGTD4611R
13.0	ZGTD3013R	ZGTD3613R	ZGTD4113R	ZGTD4613R
15.0	ZGTD3015R*	ZGTD3615R*	ZGTD4115R*	ZGTD4615R*
Diameter D1/D2/D3 (mm)	Ø 2.2 / 3.0	Ø 3.0 / 3.6	Ø 3.0 / 3.6 / 4.1	Ø 3.0 / 4.1 / 4.6
Color	Yellow	Green	Blue	Red

ZENEX GUIDE KIT Instruments

ZENEX Guide Cortical Drill

- Drill used for removing cortical bone from hard bone when using Surgical Guide
- Recommended speed: 500~800rpm
- Material: Stainless Steel (TrimRite®)

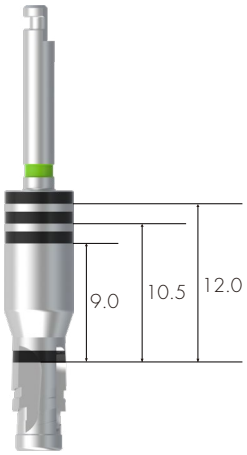

Fixture (Regular)	F3.5	F4.0	F4.5	F5.0
Drill	ZGCDF35R	ZGCDF40R	ZGCDF45R	ZGCDF50R
Color	Yellow	Green	Blue	Red

ZENEX Guide Fixture Driver

- For Contra Angle: Directly attached to fixture by connecting to handpiece when using Implant motor
- For Wrench: Directly attached to fixture by using Torque Wrench
- Recommended speed: 20rpm
- Separate kits for each system contain only the drivers for that system.
  (I-System Kit Code: ZENGUSKIT, T-System Kit Code: ZENGUTKIT, R-System Kit Code: ZENGURKIT)
- Material: Stainless Steel (TrimRite®)

I-System

	Contra Angle				Wrench			
Fixture (Regular)	F3.5		F4.0	F4.5 F5.0	F3.5		F4.0	F4.5 F5.0
	ZGFDCSM25R		ZGFDCSR25R		ZGFDRSM25R		ZGFDRSR25R	

T-System

Contra Angle





Fixture (Regular)	F3.5	F4.0	F4.5	F5.0
	ZGFDCTM21R	ZGFDCTR25R		

Wrench





Fixture (Regular)	F3.5	F4.0	F4.5	F5.0
	ZGFDRTM21R	ZGFDRTR25R		

R-System

Contra Angle



Fixture (Regular)	F3.5	F4.0	F4.5	F5.0
	ZGFDCRR23R			

Wrench



Fixture (Regular)	F3.5	F4.0	F4.5	F5.0
	ZGFDRRR23R			

ZENEX GUIDE KIT Instruments

ZENEX Guide Anchor Drill

- Used for drilling before using Anchor Screw
- Recommended speed: 1,200~1,500rpm
- Material: Stainless Steel (TrimRite®)



ZGAD13

ZENEX Guide Anchor Screw

- Used to firmly fix Surgical Guide (ex. edentulous case)
- Optional application at the procedure planning stage
- Connected with Mount Driver (MDCAS/MDRAS)
- Recommended speed: Less than 50rpm
- Material: Titanium alloy + Silicone



ZGAS16

Mount Driver

- Used by fastening to Anchor Screw during Guide procedure
- Recommended speed: 20rpm
- Material: Stainless Steel (TrimRite®)

* Optional

	Contra Angle	Wrench
		
Regular		
Short	MDCAS	MDRAS
Long	MDCAL*	MDRAL*

Shank Driver

- It is connected to the fixture driver for contra angle and used by hand or connected to the torque wrench to install or remove the fixture.
- Material: Stainless Steel (TrimRite®)



SD70

ZENEX GUIDE KIT Instruments

1.2 Hex Driver

- Driver for connecting with Torque Wrench
- Used for connecting to cover screw and surgical instrument with 1.2 Hex
- Follow recommended tightening torque calculation value
- Be sure to check transformation of Hex tip before use
- Material: Stainless Steel+Titanium alloy

L (mm)	10.0	15.0
	HEDR1210	HEDR1215

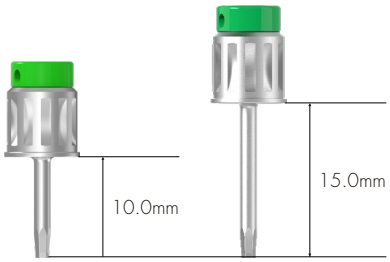

Torque Wrench

- Used for placing fixture and tightening implant abutments and screws
- Confirm torque calculation value by pulling the bar to be aligned with the marked line
- Recommended to use by pressing head to prevent detachment of Torque Wrench and surgical instruments
- Material: Stainless Steel



TW60B

Depth Gauge

- Measuring drilling depth
- Measurable depth: 6~20mm
- Material: Titanium alloy

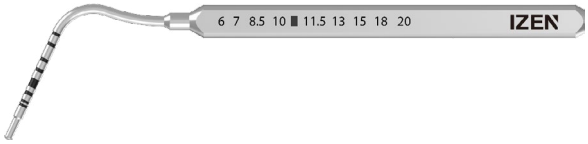

DG1720

Steel Bowl

- Used for cleaning surgery instruments
- Material: Stainless Steel



STBOWL

Drilling Protocol

Regular

		Initial Drill (Ø2.2)	Twist Drill				Cortical Drill
			F3.5 (Ø3.0)	F4.0 (Ø3.6)	F4.5 (Ø4.1)	F5.0 (Ø4.6)	Normal/Hard
							
 **F3.5**	Soft	●	●				
	Normal/Hard	●	●				●
 **F4.0**	Soft	●	●	●			
	Normal/Hard	●	●	●			●
 **F4.5**	Soft	●	●	●	●		
	Normal/Hard	●	●	●	●		●
 **F5.0**	Soft	●	●	●	●	●	
	Normal/Hard	●	●	●	●	●	●

Drilling Sequence

Ø 3.5mm Fixture

(ZENEX MULTI & PLUS T-System Mini)

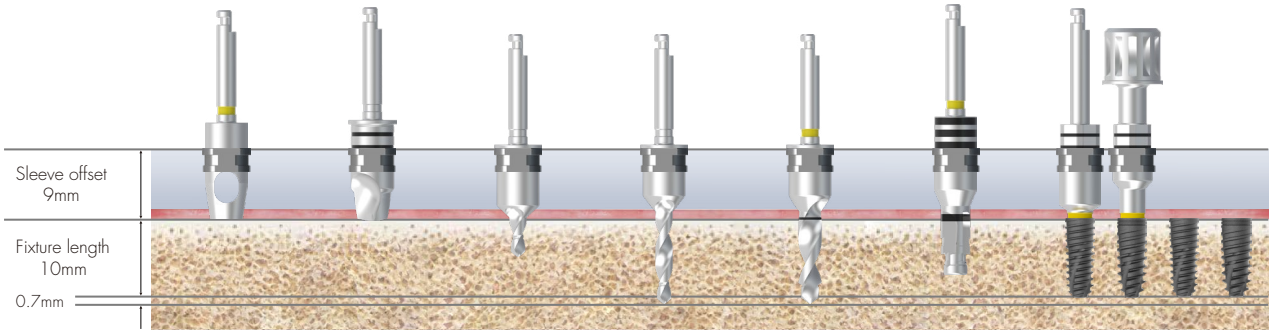

Bone Quality	Tissue Punch	Flattening Drill	Initial Drill (Ø2.2)	Initial Drill (Ø2.2)	Twist Drill (Ø3.0)	Cortical Drill	Ø3.5 Fixture
Soft	▶	(▶)	▶	▶	▶		Implant Placement
Normal / Hard	▶	(▶)	▶	▶	▶	▶	

Select Twist Drill (Product code: ZGTD3005R) according to the situation (optional)

Ø 4.0mm Fixture

(ZENEX MULTI & PLUS T-System Regular)

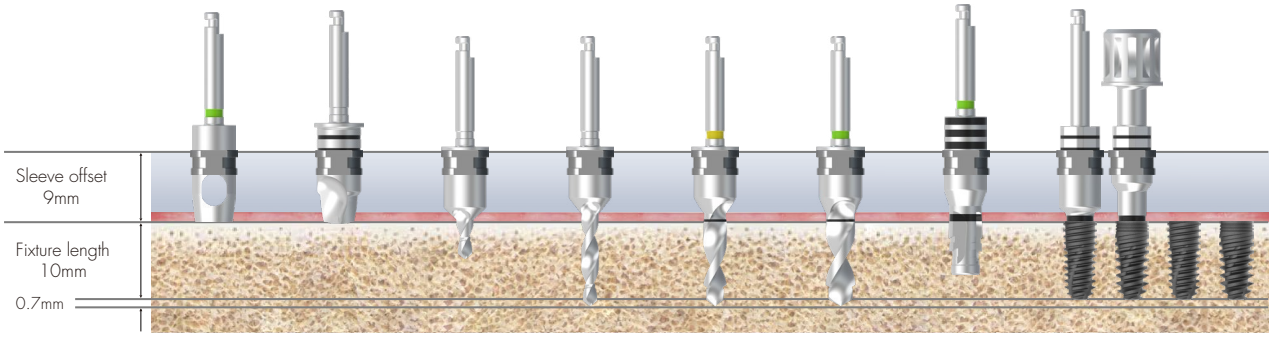

Bone Quality	Tissue Punch	Flattening Drill	Initial Drill (Ø2.2)	Initial Drill (Ø2.2)	Twist Drill (Ø3.0)	Twist Drill (Ø3.6)	Cortical Drill	Ø4.0 Fixture
Soft	▶	(▶)	▶	▶	▶	▶		Implant Placement
Normal / Hard	▶	(▶)	▶	▶	▶	▶	▶	

Select Twist Drill (Product code: ZGTD3005R, ZGTD3605R) according to the situation (optional)

Drilling Sequence

Ø 4.5mm Fixture

(ZENEX MULTI & PLUS T-System Regular)

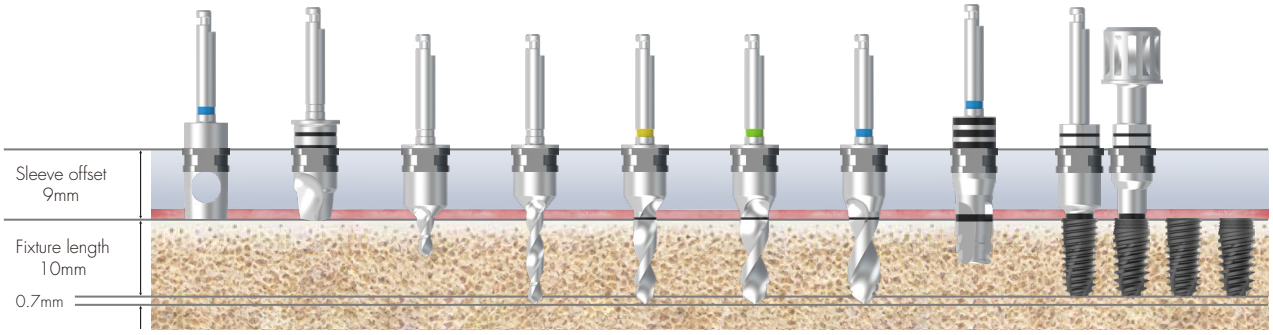

Bone Quality	Tissue Punch	Flattening Drill	Initial Drill (Ø2.2)	Initial Drill (Ø2.2)	Twist Drill (Ø3.0)	Twist Drill (Ø3.6)	Twist Drill (Ø4.1)	Cortical Drill	Ø4.5 Fixture
Soft	▶	(▶)	▶	▶	▶	▶	▶		Implant Placement
Normal / Hard	▶	(▶)	▶	▶	▶	▶	▶	▶	

Select Twist Drill (Product code: ZGTD3005R, ZGTD3605R, ZGTD4105R) according to the situation (optional)

Ø 5.0mm Fixture

(ZENEX MULTI & PLUS T-System Wide)

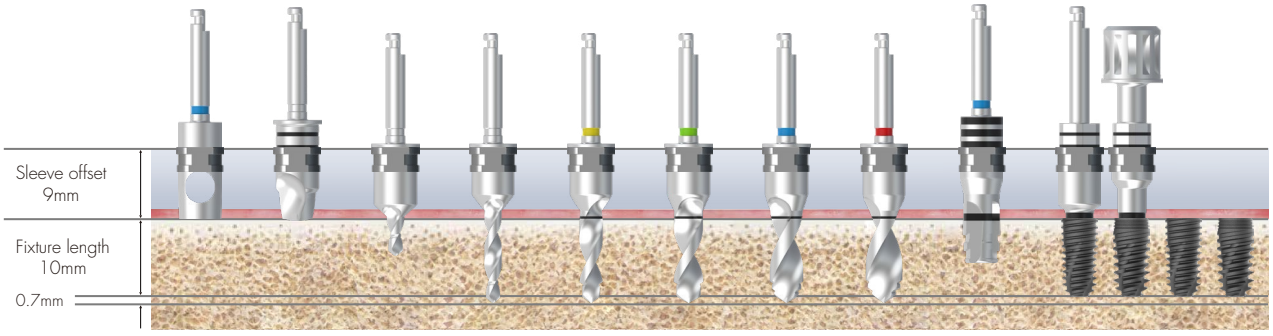

Bone Quality	Tissue Punch	Flattening Drill	Initial Drill (Ø2.2)	Initial Drill (Ø2.2)	Twist Drill (Ø3.0)	Twist Drill (Ø3.6)	Twist Drill (Ø4.1)	Twist Drill (Ø4.6)	Cortical Drill	Ø5.0 Fixture
Soft	▶	(▶)	▶	▶	▶	▶	▶	▶		Implant Placement
Normal / Hard	▶	(▶)	▶	▶	▶	▶	▶	▶	▶	

Select Twist Drill (Product code: ZGTD3005R, ZGTD3605R, ZGTD4105R, ZGTD4605R) according to the situation (optional)

IZEN
IMPLANT

ZENEX GUIDE MINI KIT

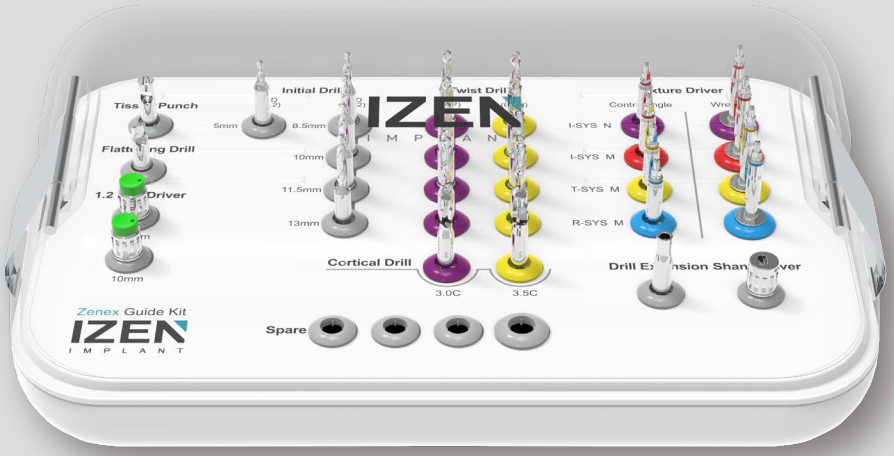



T-System

ZENEX GUIDE MINI KIT
(ZENGMKIT)

Composition on lower kit tray



Depth Gauge
DG1720

Torque Wrench
TW60B

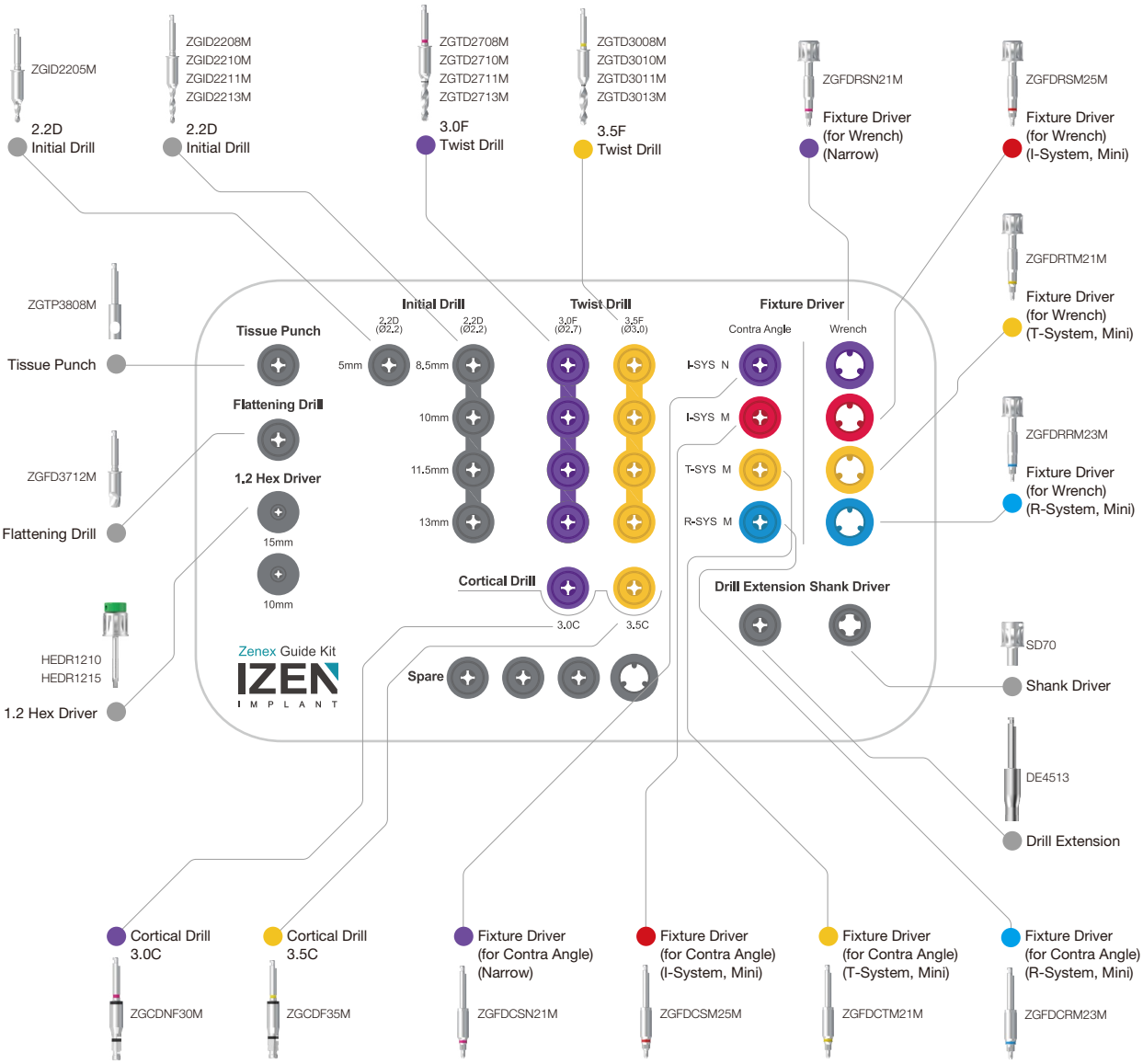

ZENEX GUIDE MINI KIT
T-System (ZENGMTKIT)

Composition on lower kit tray

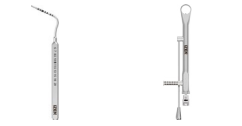

Depth Gauge
DG1720

Torque Wrench
TW60B

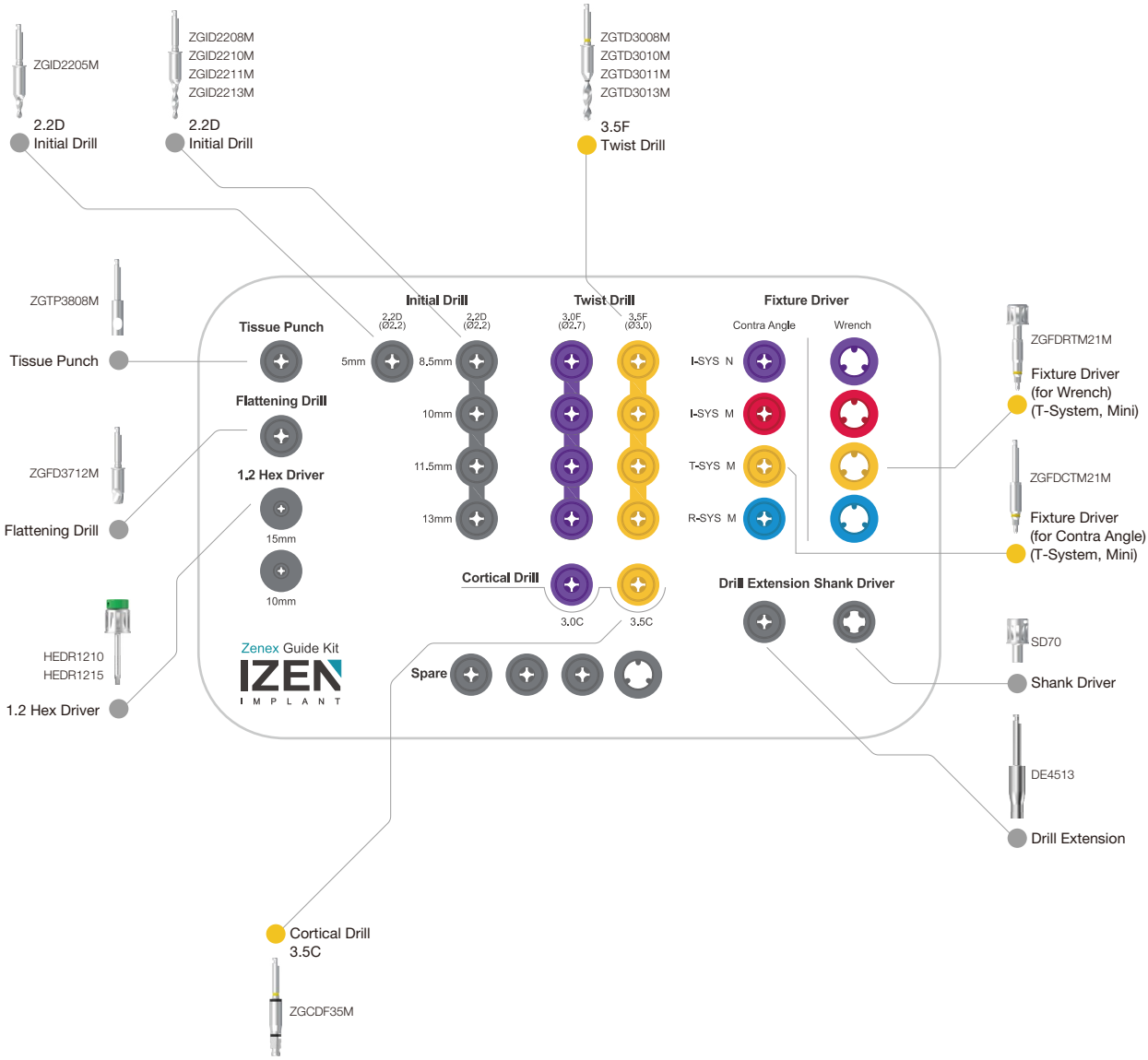

ZENEX GUIDE MINI KIT Instruments

ZENEX Guide Tissue Punch

- Drill used for removing gingiva when using Surgical Guide
- Recommended speed: 1,200~1,500rpm
- Material: Stainless Steel (TrimRite®)
- Offest : 12mm

Fixture	F3.0 (Narrow)	F3.5 (Mini)
Tissue Punch	ZGTP3808M	
Diameter (mm)	Ø3.8	
Color	Metal	



ZENEX Guide Flattening Drill

- Used for narrow or uneven ridges
- Recommended to use before Initial Drill
- Stable cutting without splashing with multiple cutting edges
- Recommended speed: 1,200~1,500rpm
- Material: Stainless Steel (TrimRite®)

Fixture	F3.0 (Narrow)	F3.5 (Mini)
Drill (Offset)	ZGFD3712M (12mm)	
Diameter (mm)	Ø3.7	
Color	Metal	

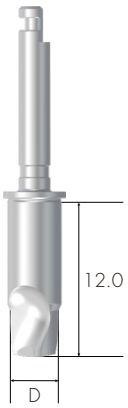

ZENEX GUIDE MINI KIT Instruments

Drill Extension

- Lengthen surgical instrument in use by connecting to drill and Implant motor
- Be sure to use after accurate connection to prevent product detachment or bending that connected to Drill Extension
- Material: Stainless Steel (TrimRite®) +Titanium alloy

DE4513

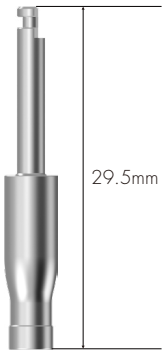

ZENEX Guide Initial Drill

- Drill to mark base hole on the bone for easy initial drilling after Tissue Punch when using Surgical Guide
- Recommended speed: 1,200~1,500rpm
- Material: Stainless Steel (TrimRite®)

* Optional

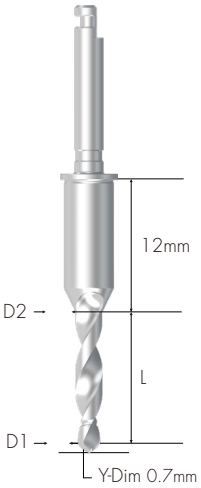

L (mm) \ Fixture	F3.0 (Narrow)	F3.5 (Mini)
5.0	ZGID2205M	
7.0	-	
8.5	ZGID2208M	
10.0	ZGID2210M	
11.5	ZGID2211M	
13.0	ZGID2213M	
15.0	ZGID2215M*	
Diameter D1/D2 (mm)	Ø 1.8 / 2.2	

ZENEX Guide Twist Drill

- Straight drill to shorten surgery steps when using Surgical Guide
- Recommended speed: 1,200~1,500rpm
- Material: Stainless Steel (TrimRite®)

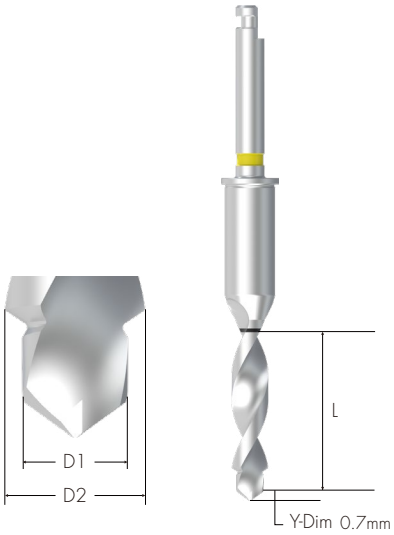

* Optional

L (mm) \ Fixture	F3.0 (Narrow)	F3.5 (Mini)
5.0	-	-
7.0	-	-
8.5	ZGTD2708M	ZGTD3008M
10.0	ZGTD2710M	ZGTD3010M
11.5	ZGTD2711M	ZGTD3011M
13.0	ZGTD2713M	ZGTD3013M
15.0	ZGTD2715M*	ZGTD3015M*
Diameter D1/D2 (mm)	Ø 1.8 / 2.2	Ø 2.2 / 3.0
Color	Pink	Yellow

ZENEX GUIDE MINI KIT Instruments

ZENEX Guide Cortical Drill

- Drill used for removing cortical bone from hard bone when using Surgical Guide
- Recommended speed: 500~800rpm
- Material: Stainless Steel (TrimRite®)

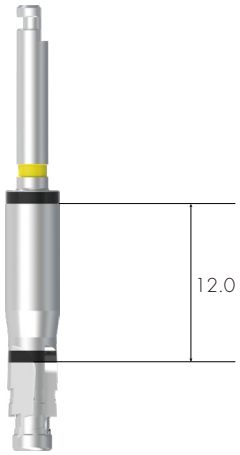

Fixture	F3.0 (Narrow)	F3.5 (Mini)
Drill	ZGCDNF30M	ZGCDF35M
Color	Pink	Yellow

ZENEX Guide Fixture Driver

- For Contra Angle: Directly attached to fixture by connecting to handpiece when using Implant motor
- For Wrench: Directly attached to fixture by using Torque Wrench
- Recommended speed: 20rpm
- Separate kits for each system contain only the drivers for that system.
  (I-System Kit Code: ZENGMSKIT, T-System Kit Code: ZENGMTKIT, R-System Kit Code: ZENGMRKIT)
- Material: Stainless Steel (TrimRite®)

I-System Narrow

Fixture (Narrow)	Contra Angle	Wrench
		
	F3.0	F3.0
	ZGFDCSN21M	ZGFDRSN21M

I-System Mini

	Contra Angle	Wrench
		
Fixture (Mini)	F3.5	F3.5
	ZGFDCSM25M	ZGFDRSM25M

T-System Mini

	Contra Angle	Wrench
		
Fixture (Mini)	F3.5	F3.5
	ZGFDCTM21M	ZGFDRTM21M

R-System Mini

	Contra Angle	Wrench
		
Fixture (Mini)	F3.5	F3.5
	ZGFDCRM23M	ZGFDRRM23M

ZENEX GUIDE MINI KIT Instruments

Shank Driver

- It is connected to the fixture driver for contra angle and used by hand or connected to the torque wrench to install or remove the fixture.
- Material: Stainless Steel (TrimRite®)



SD70

1.2 Hex Driver

- Driver for connecting with Torque Wrench
- Used for connecting to cover screw and surgical instrument with 1.2 Hex
- Follow recommended tightening torque calculation value
- Be sure to check transformation of Hex tip before use
- Material: Stainless Steel+Titanium alloy

L (mm)	10.0	15.0
	HEDR1210	HEDR1215

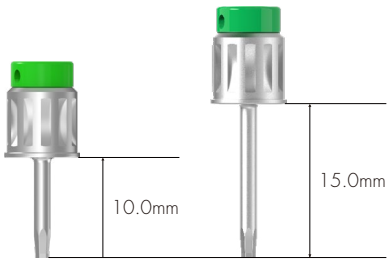

Torque Wrench

- Used for placing fixture and tightening implant abutments and screws
- Confirm torque calculation value by pulling the bar to be aligned with the marked line
- Recommended to use by pressing head to prevent detachment of Torque Wrench and surgical instruments
- Material: Stainless Steel



TW60B

Depth Gauge

- Measuring drilling depth
- Measurable depth: 6~20mm
- Material: Titanium alloy

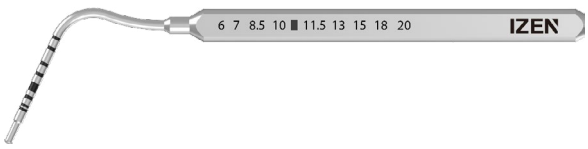

DG1720

Drilling Protocol

Mini

		Initial Drill (Ø2.2)	Twist Drill		Cortical Drill
			F3.0 (Ø2.7)	F3.5 (Ø3.0)	Normal/Hard
					
 **F3.0**	Soft	●	●		
	Normal/Hard	●	●		●
 **F3.5**	Soft	●		●	
	Normal/Hard	●		●	●

Drilling Sequence

Ø 3.5mm Fixture

(ZENEX MULTI & PLUS T-System Mini)

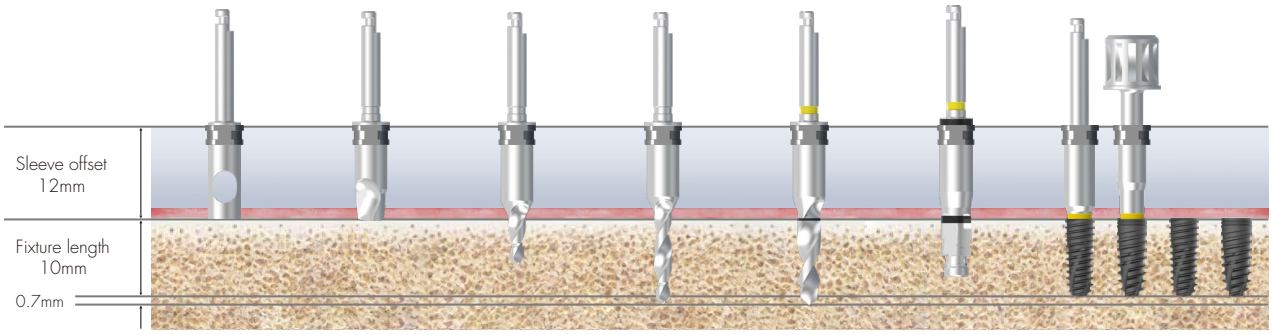

Bone Quality	Tissue Punch	Flattening Drill	Initial Drill (Ø2.2)	Initial Drill (Ø2.2)	Twist Drill (Ø3.0)	Cortical Drill	Ø3.5 Fixture
Soft	▶	(▶)	▶	▶	▶		Implant Placement
Normal / Hard	▶	(▶)	▶	▶	▶	▶	

ZENEX GUIDE WIDE KIT

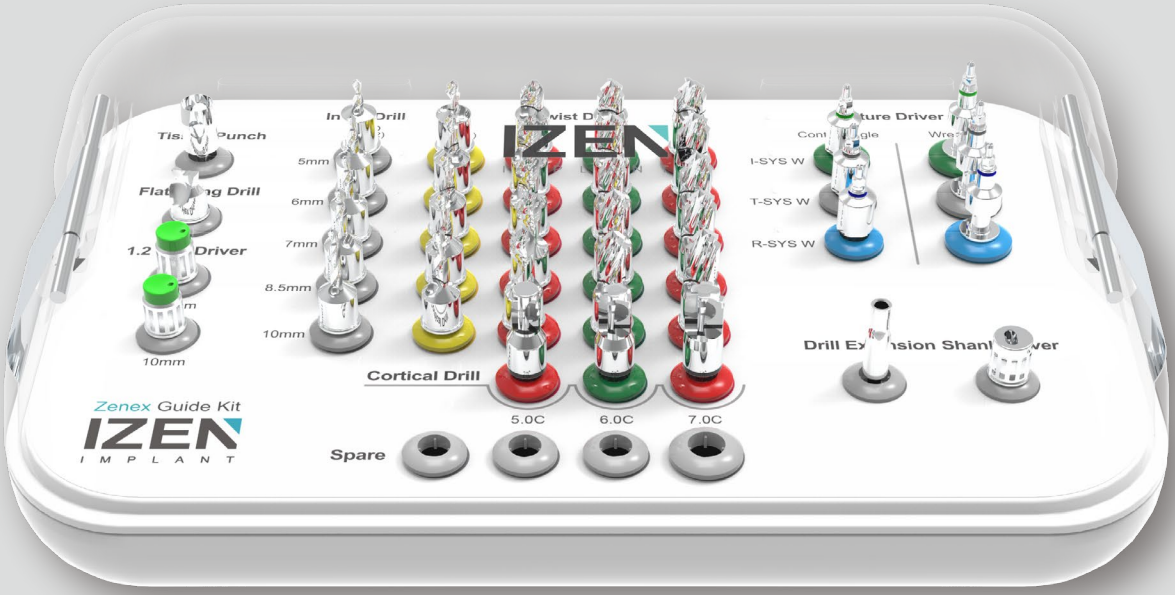



T-System

ZENEX GUIDE WIDE KIT
(ZENGWKIT)

Composition on lower kit tray



Depth Gauge
DG1720

Torque Wrench
TW60B

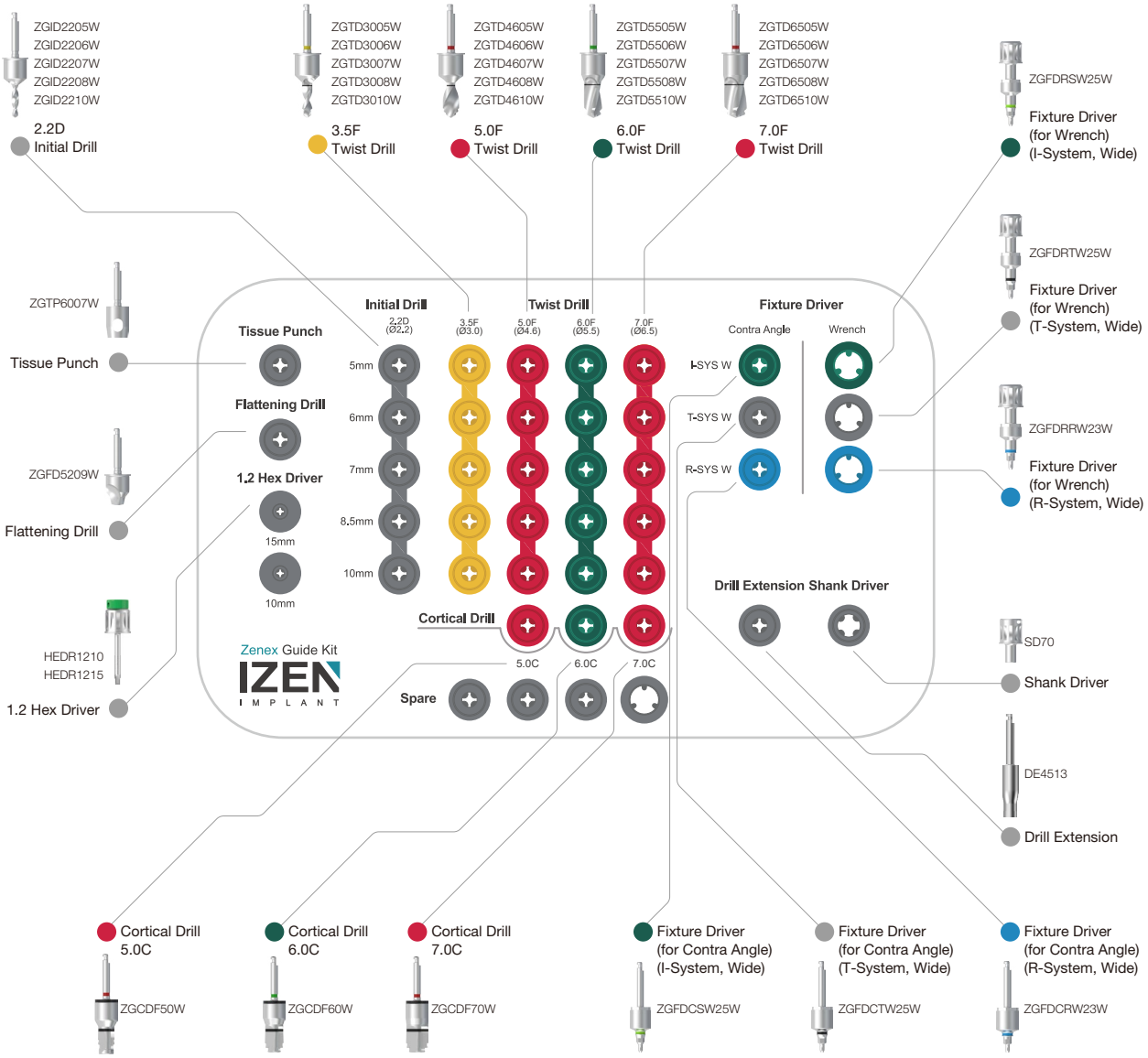

ZENEX GUIDE WIDE KIT
T-System (ZENGWTKIT)

Composition on lower kit tray

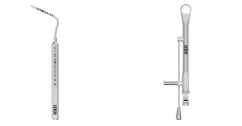

Depth Gauge
DG1720

Torque Wrench
TW60B

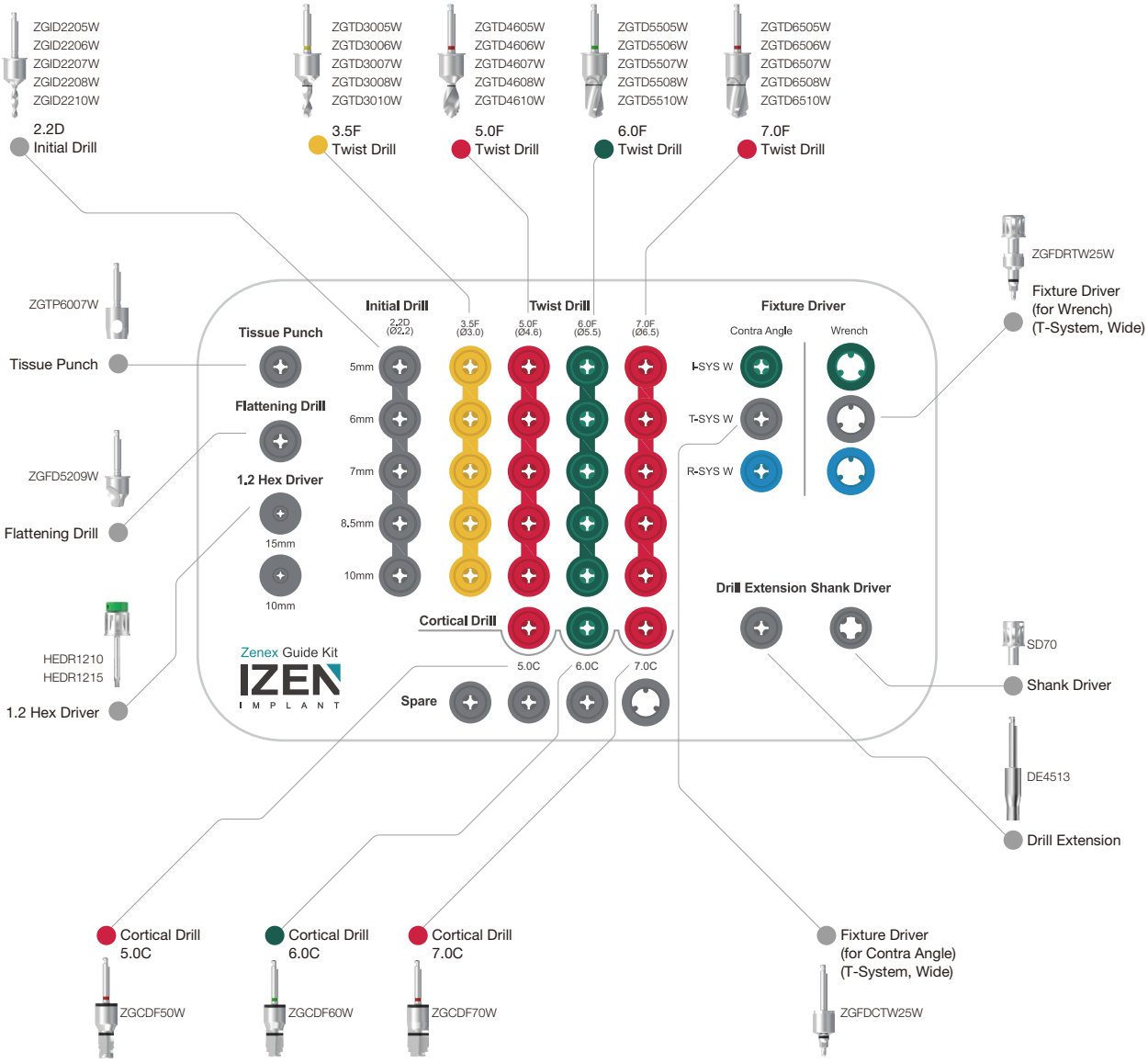

ZENEX GUIDE WIDE KIT Instruments

ZENEX Guide Tissue Punch

- Drill used for removing gingiva when using Surgical Guide
- Recommended speed: 1,200~1,500rpm
- Material: Stainless Steel (TrimRite®)
- Offest : 9mm

Fixture (Wide)	F5.0	F6.0	F7.0
Tissue Punch		ZGTP6007W	
Diameter (mm)		Ø6.0	
Color		Metal	



ZENEX Guide Flattening Drill

- Used for narrow or uneven ridges
- Recommended to use before Initial Drill
- Stable cutting without splashing with multiple cutting edges
- Recommended speed: 1,200~1,500rpm
- Material: Stainless Steel (TrimRite®)

Fixture (Wide)	F5.0	F6.0	F7.0
Drill (Offset)		ZGFD5209W (9mm)	
Diameter (mm)		Ø5.2	
Color		Metal	

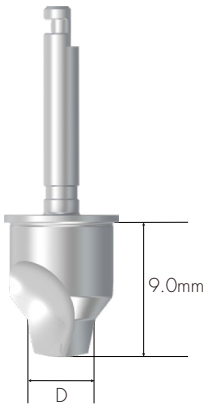

ZENEX GUIDE WIDE KIT Instruments

Drill Extension

- Lengthen surgical instrument in use by connecting to drill and Implant motor
- Be sure to use after accurate connection to prevent product detachment or bending that connected to Drill Extension
- Material: Stainless Steel (TrimRite®) +Titanium alloy

DE4513

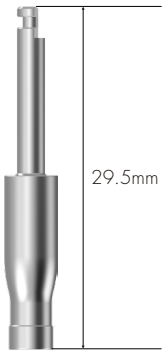

ZENEX Guide Initial Drill

- Drill to mark base hole on the bone for easy initial drilling after Tissue Punch when using Surgical Guide
- Recommended speed: 1,200~1,500rpm
- Material: Stainless Steel (TrimRite®)

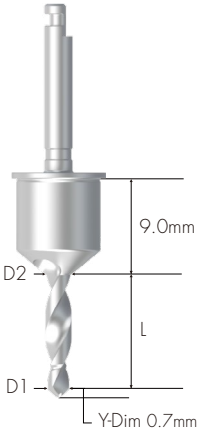

* Optional

L (mm) \ Fixture (Wide)	F5.0	F6.0	F7.0
5.0	ZGID2205W		
6.0		ZGID2206W	
7.0	ZGID2207W		
8.5		ZGID2208W	
10.0	ZGID2210W		
11.0		ZGID2211W*	
Diameter D1/D2 (mm)	Ø 1.8 / 2.2		

ZENEX Guide Twist Drill

- Straight drill to shorten surgery steps when using Surgical Guide
- Recommended speed: 1,200~1,500rpm
- Material: Stainless Steel (TrimRite®)

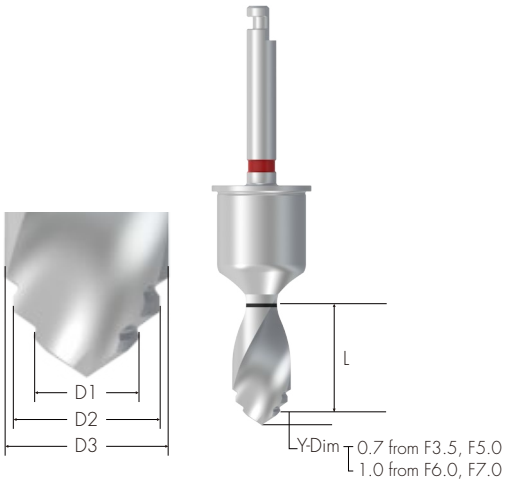

* Optional

L (mm) \ Fixture (Wide)	F3.5	F5.0	F6.0	F7.0
5.0	ZGTD3005W	ZGTD4605W	ZGTD5505W	ZGTD6505W
6.0	ZGTD3006W	ZGTD4606W	ZGTD5506W	ZGTD6506W
7.0	ZGTD3007W	ZGTD4607W	ZGTD5507W	ZGTD6507W
8.5	ZGTD3008W	ZGTD4608W	ZGTD5508W	ZGTD6508W
10.0	ZGTD3010W	ZGTD4610W	ZGTD5510W	ZGTD6510W
11.0	ZGTD3011W*	ZGTD4611W*	ZGTD5511W*	ZGTD6511W*
Diameter D1/D2/D3 (mm)	Ø 2.2 / 3.0	Ø 3.0 / 4.1 / 4.6	Ø 4.6 / 5.5	Ø 5.5 / 6.5
Color	Yellow	Red	Green	Red

ZENEX GUIDE WIDE KIT Instruments

ZENEX Guide Cortical Drill

- Drill used for removing cortical bone from hard bone when using Surgical Guide
- Recommended speed: 500~800rpm
- Material: Stainless Steel (TrimRite®)

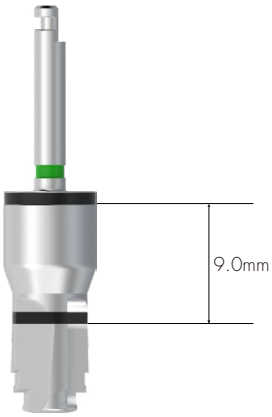

Fixture (Wide)	F5.0	F6.0	F7.0
Drill	ZGCDF50W	ZGCDF60W	ZGCDF70W
Color	Red	Green	Red

ZENEX Guide Fixture Driver

- For Contra Angle: Directly attached to fixture by connecting to handpiece when using Implant motor
- For Wrench: Directly attached to fixture by using Torque Wrench
- Recommended speed: 20rpm
- Separate kits for each system contain only the drivers for that system.
  (I-System Kit Code : ZENGWSKIT, T-System Kit Code : ZENGWTKIT, R-System Kit Code : ZENGWRKIT)
- Material: Stainless Steel (TrimRite®)

I-System

	Contra Angle			Wrench		
Fixture (Wide)	F5.0	F6.0	F7.0	F5.0	F6.0	F7.0
	ZGFDCSW25W			ZGFDRSW25W		

T-System

	Contra Angle			Wrench		
Fixture (Wide)	F5.0	F6.0	F7.0	F5.0	F6.0	F7.0
						
	ZGFDCTW25W			ZGFDRTW25W		

R-System

	Contra Angle			Wrench		
Fixture (Wide)	F5.0	F6.0	F7.0	F5.0	F6.0	F7.0
						
	ZGFDCRW23W			ZGFDRRW23W		

ZENEX GUIDE WIDE KIT Instruments

Shank Driver

- It is connected to the fixture driver for contra angle and used by hand or connected to the torque wrench to install or remove the fixture.
- Material: Stainless Steel (TrimRite®)



SD70

1.2 Hex Driver

- Driver for connecting with Torque Wrench
- Used for connecting to cover screw and surgical instrument with 1.2 Hex
- Follow recommended tightening torque calculation value
- Be sure to check transformation of Hex tip before use
- Material: Stainless Steel+Titanium alloy

L (mm)	10.0	15.0
	HEDR1210	HEDR1215

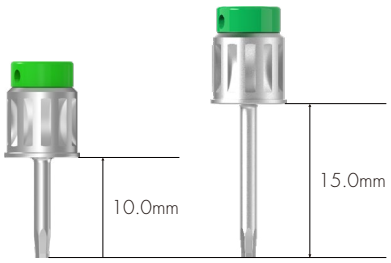

Torque Wrench

- Used for placing fixture and tightening implant abutments and screws
- Confirm torque calculation value by pulling the bar to be aligned with the marked line
- Recommended to use by pressing head to prevent detachment of Torque Wrench and surgical instruments
- Material: Stainless Steel



TW60B

Depth Gauge

- Measuring drilling depth
- Measurable depth: 6~20mm
- Material: Titanium alloy

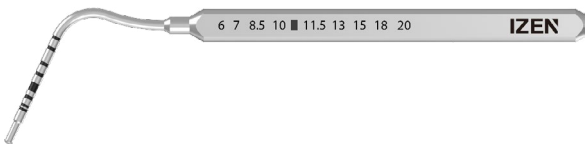

DG1720

Drilling Protocol

Wide

		Initial Drill (Ø2.2)	Twist Drill				Cortical Drill
			F3.5 (Ø3.0)	F5.0 (Ø4.6)	F6.0 (Ø5.5)	F7.0 (Ø6.5)	Normal/Hard
							
 **F5.0**	Soft	●	●	●			
	Normal/Hard	●	●	●			●
 **F6.0**	Soft	●	●	●	●		
	Normal/Hard	●	●	●	●		●
 **F7.0**	Soft	●	●	●	●	●	
	Normal/Hard	●	●	●	●	●	●

Drilling Sequence

Ø 5.0mm Fixture

(ZENEX MULTI & PLUS T-System Wide)

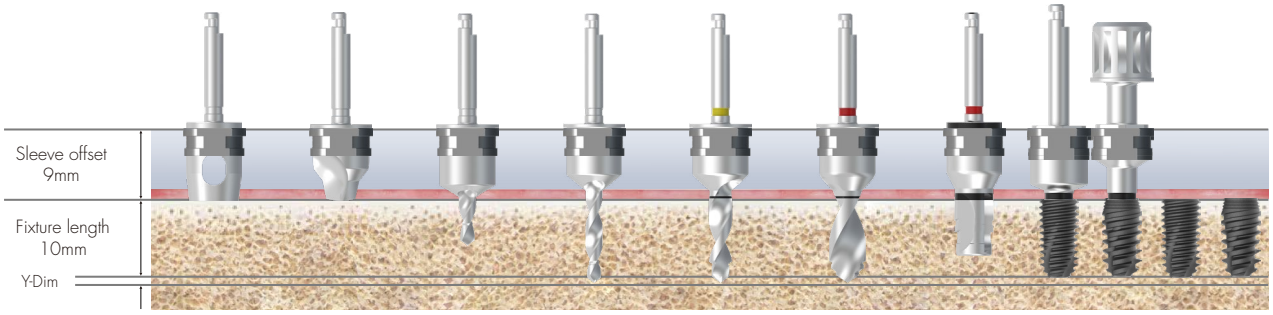

Bone Quality	Tissue Punch	Flattening Drill	Initial Drill (Ø2.2)	Initial Drill (Ø2.2)	Twist Drill (Ø3.0)	Twist Drill (Ø4.6)	Cortical Drill	Ø5.0 Fixture
Soft	▶	(▶)	▶	▶	▶	▶		Implant Placement
Normal / Hard	▶	(▶)	▶	▶	▶	▶	▶	

Select Twist Drill (Product code: ZGTD3005W, ZGTD4605W) according to the situation (optional)

Ø 6.0mm Fixture

(ZENEX MULTI T-System Wide)

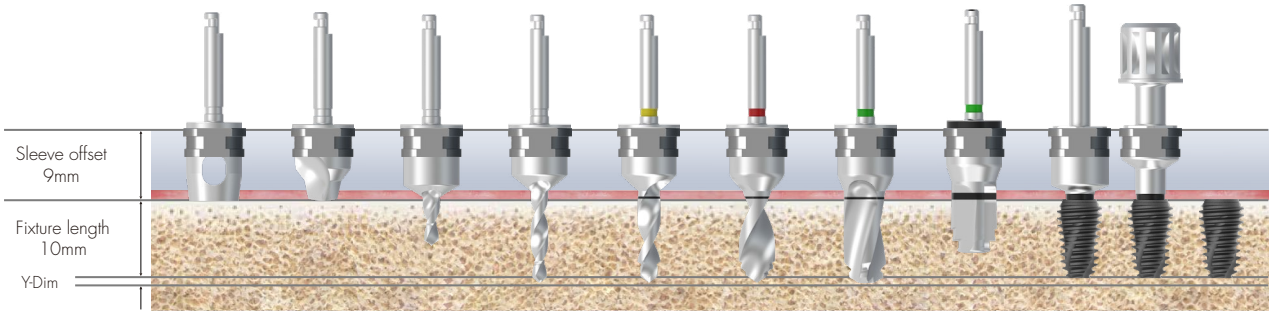

Bone Quality	Tissue Punch	Flattening Drill	Initial Drill (Ø2.2)	Initial Drill (Ø2.2)	Twist Drill (Ø3.0)	Twist Drill (Ø4.6)	Twist Drill (Ø5.5)	Cortical Drill	Ø6.0 Fixture
Soft	▶	(▶)	▶	▶	▶	▶	▶		Implant Placement
Normal / Hard	▶	(▶)	▶	▶	▶	▶	▶	▶	

Select Twist Drill (Product code: ZGTD3005W, ZGTD4605W, ZGTD5505W) according to the situation (optional)

Drilling Sequence

Ø 7.0mm Fixture

(ZENEX MULTI T-System Wide)

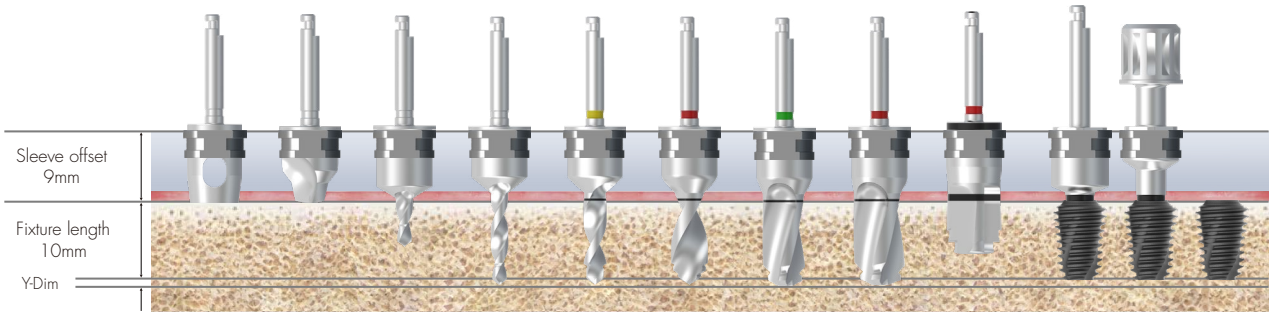

Bone Quality	Tissue Punch	Flattening Drill	Initial Drill (Ø2.2)	Initial Drill (Ø2.2)	Twist Drill (Ø3.0)	Twist Drill (Ø4.6)	Twist Drill (Ø5.5)	Twist Drill (Ø6.5)	Cortical Drill	Ø7.0 Fixture
Soft	▶	(▶)	▶	▶	▶	▶	▶	▶		Implant Placement
Normal / Hard	▶	(▶)	▶	▶	▶	▶	▶	▶	▶	

Select Twist Drill (Product code: ZGTD3005W, ZGTD4605W, ZGTD5505W, ZGTD6505W) according to the situation (optional)

IZEN
IMPLANT

ZENEX GUIDE KIT appendix

Sleeve

Code	ZGS53R
Inner Diameter	Ø 5.30
Kit	ZENEX Guide Kit
Fixture	F3.5 / F4.0 / F4.5 / F5.0
Material	Titanium alloy

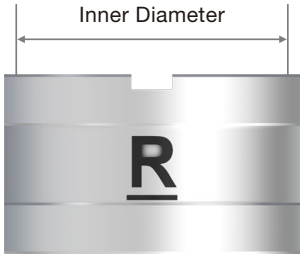

Sleeve Offset (F4.0 x 10mm Fixture)

- When the sleeve is placed upward due to thick gingiva or interference with adjacent teeth

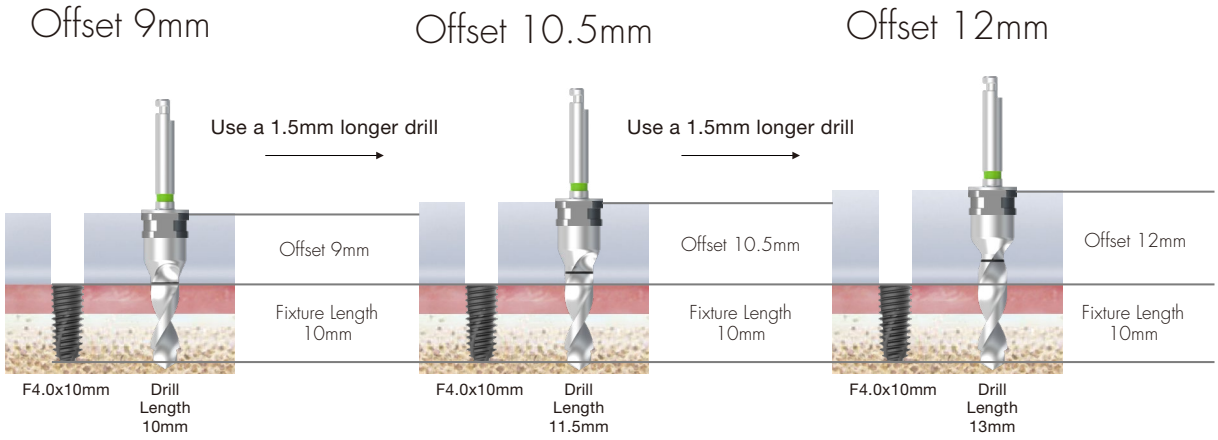

Cortical Drill

- Drill used for removing cortical bone Depth adjustable by sleeve offset

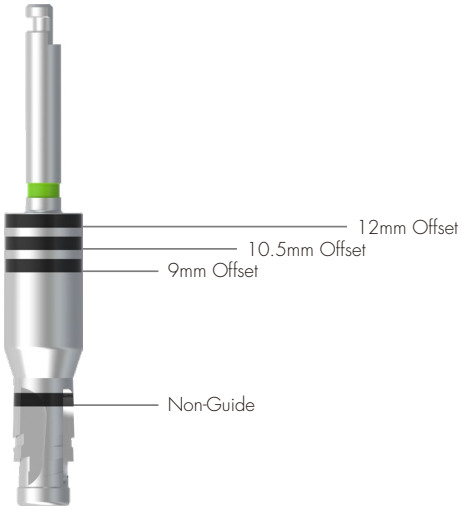

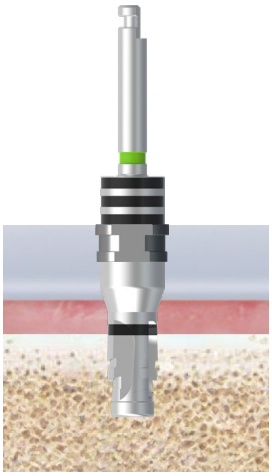

Normal Bone/ Hard bone

Fixture Driver

- After 70-80% of implantation with engine, implantation with Torque Wrench

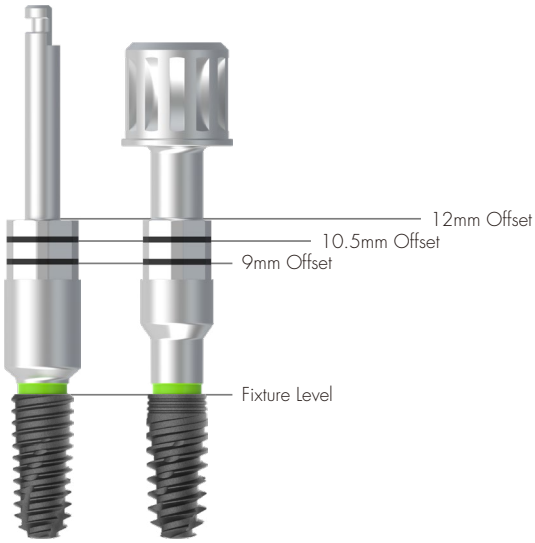

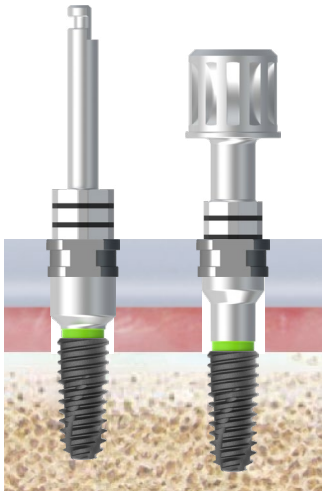

70~80% implantation

finish with ratchet

ZENEX GUIDE KIT appendix

Fixture Direction

- Control the fixture direction by matching the groove of the sleeve and the shape of the driver

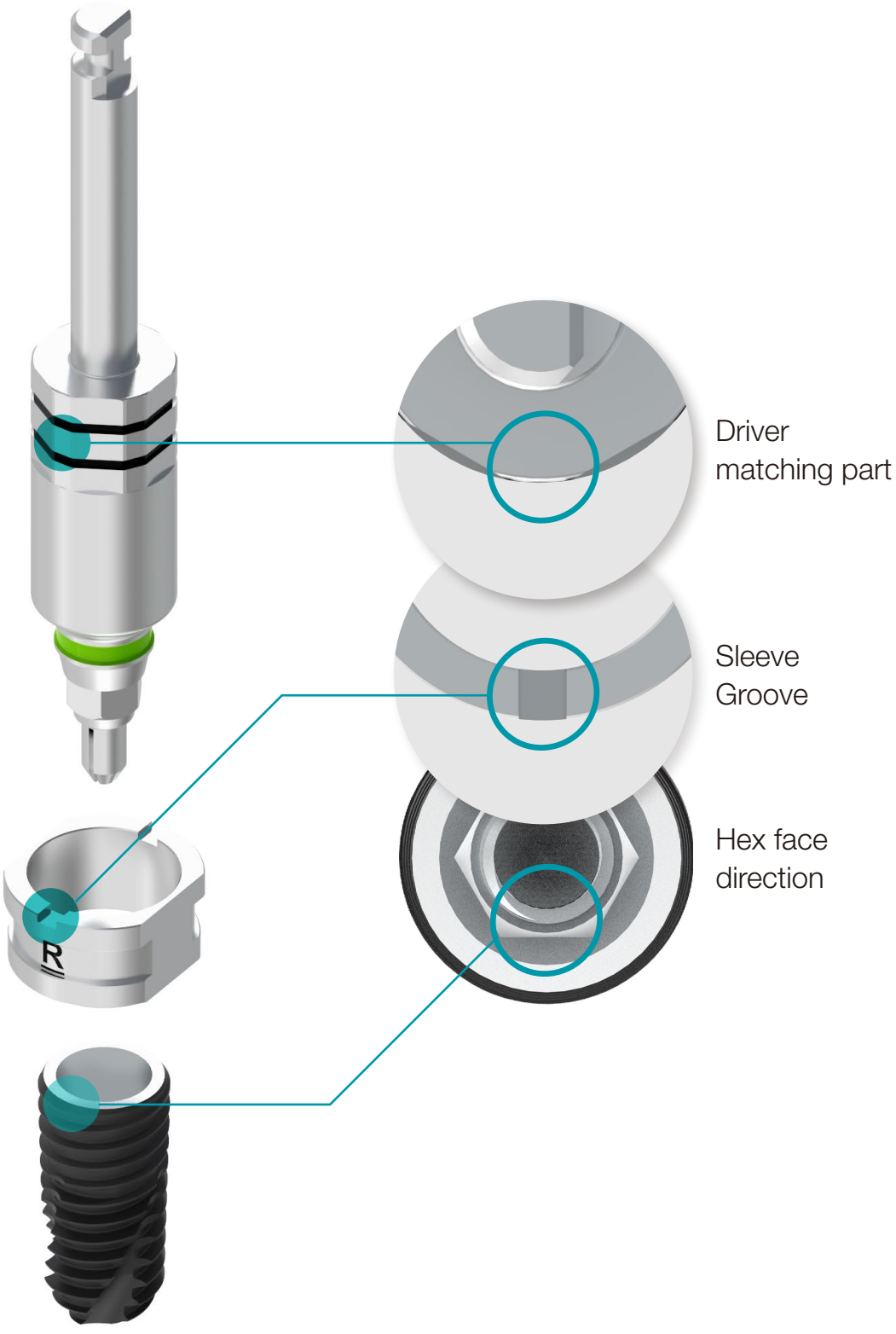

Bone Flattening Drill

- Bone leveling for accuracy prior to initial drilling

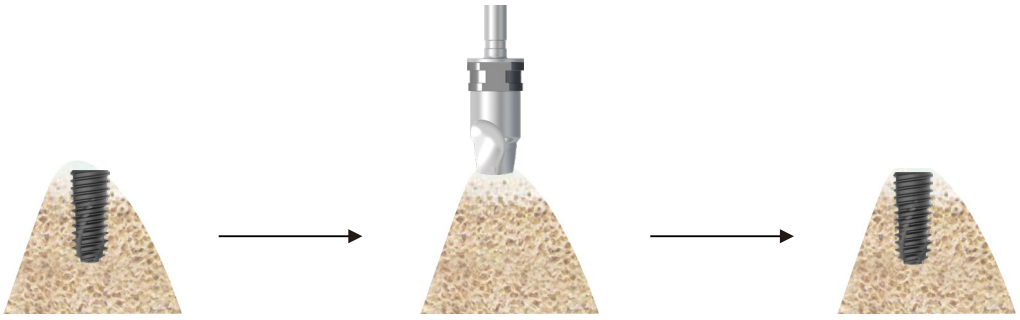

When planning implantation on inclined or irregular bones

Bone flattening

Stable implant placement

Guide Anchor Screw

- Used to firmly fix the Surgical guide, can be used for edentulous cases Applicable at the procedure planning stage



ZENEX GUIDE MINI KIT appendix

Sleeve

Code	ZGS41M
Inner Diameter	Ø 4.10
Kit	ZENEX Guide Mini Kit
Fixture	F3.0(Narrow) / F3.5
Material	Titanium alloy

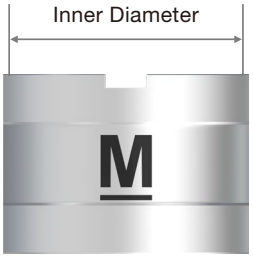

Sleeve Offset (F3.5 x 10mm Fixture)

- Use of Mini only sleeve Offset 12mm

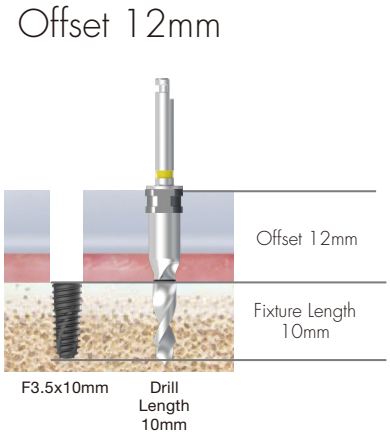

Cortical Drill

- Drill used for removing cortical bone Depth adjustable by sleeve offset

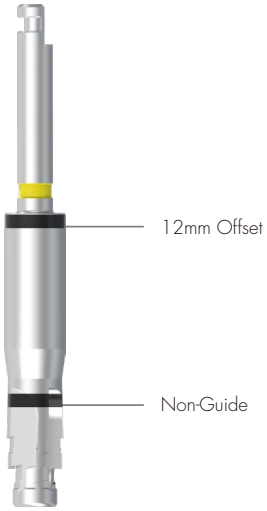

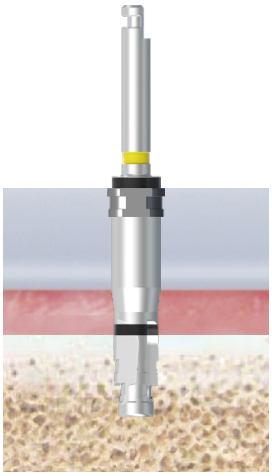

Normal Bone/ Hard bone

Fixture Driver

- After 70-80% of implantation with engine, implantation with Torque Wrench

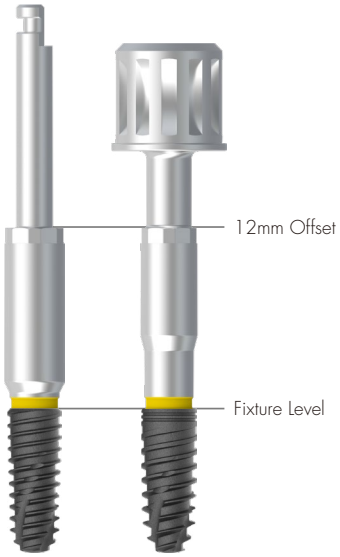

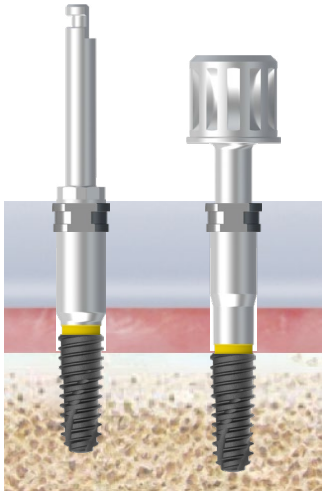

70~80% implantation

finish with ratchet

ZENEX GUIDE MINI KIT appendix

Fixture Direction

- Control the fixture direction by matching the groove of the sleeve and the shape of the driver

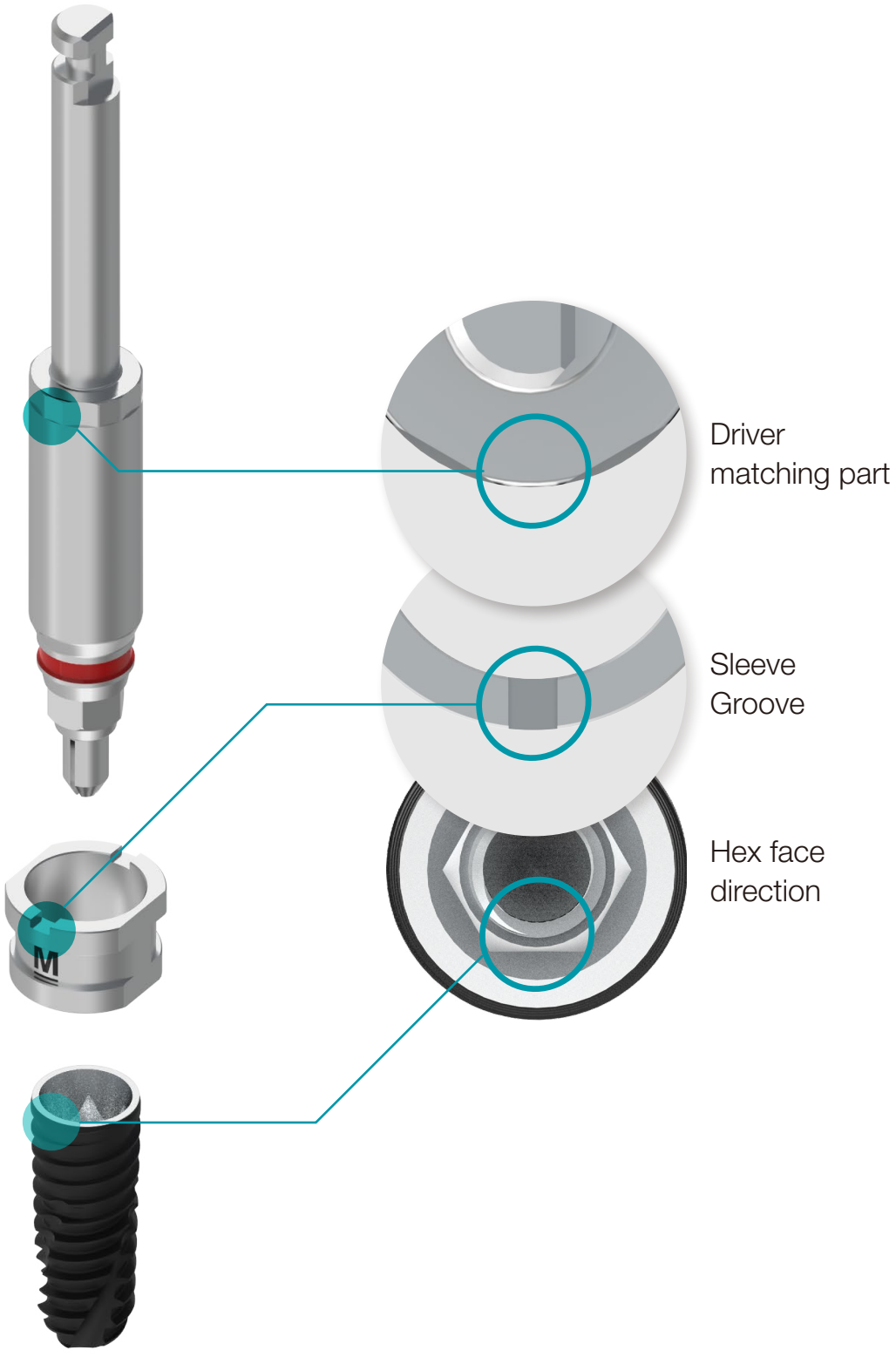

Bone Flattening Drill

- Bone leveling for accuracy prior to initial drilling

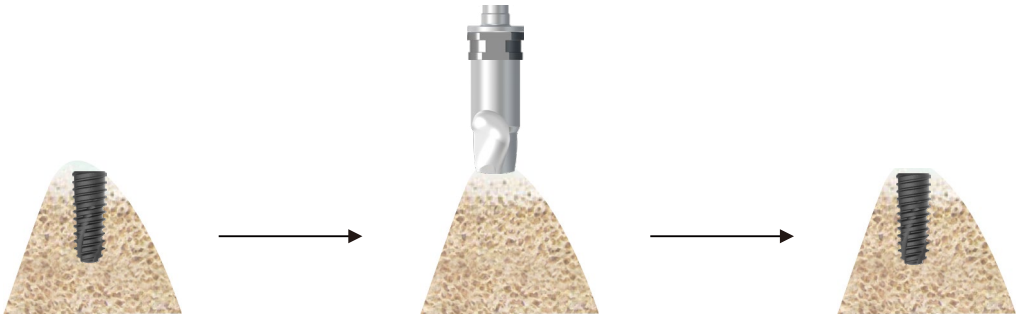

When planning implantation on inclined or irregular bones

Bone flattening

Stable implant placement

ZENEX GUIDE WIDE KIT appendix

Sleeve

Code	ZGS70W
Inner Diameter	Ø7.00
Kit	ZENEX Guide Wide Kit
Fixture	F5.0 / F6.0 / F7.0
Material	Titanium alloy

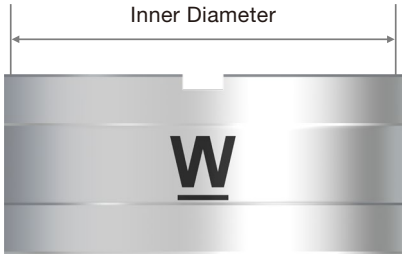

Sleeve Offset (F5.0 x 10mm Fixture)

- Use of Wide only sleeve offset 9mm

Offset 9mm

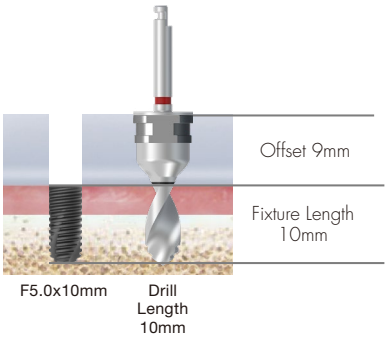

Cortical Drill

- Drill used for removing cortical bone Depth adjustable by sleeve offset

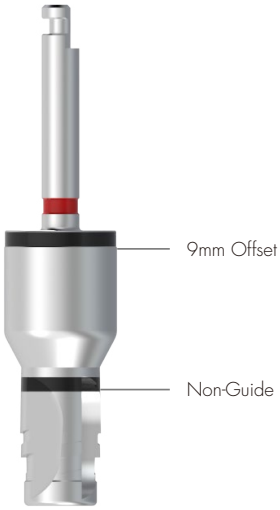

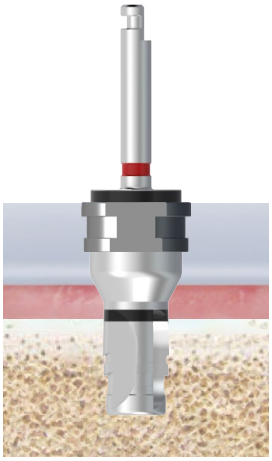

Normal Bone/ Hard bone

Fixture Driver

- After 70-80% of implantation with engine, implantation with Torque Wrench

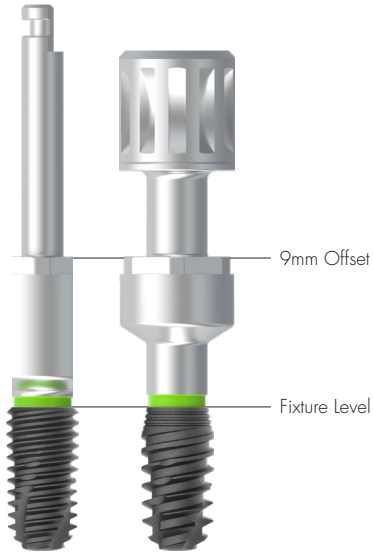

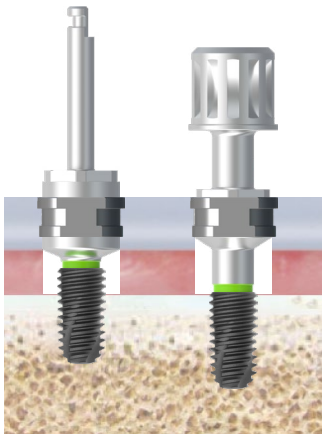

70~80% implantation

finish with ratchet

ZENEX GUIDE WIDE KIT appendix

Fixture Direction

- Control the fixture direction by matching the groove of the sleeve and the shape of the driver

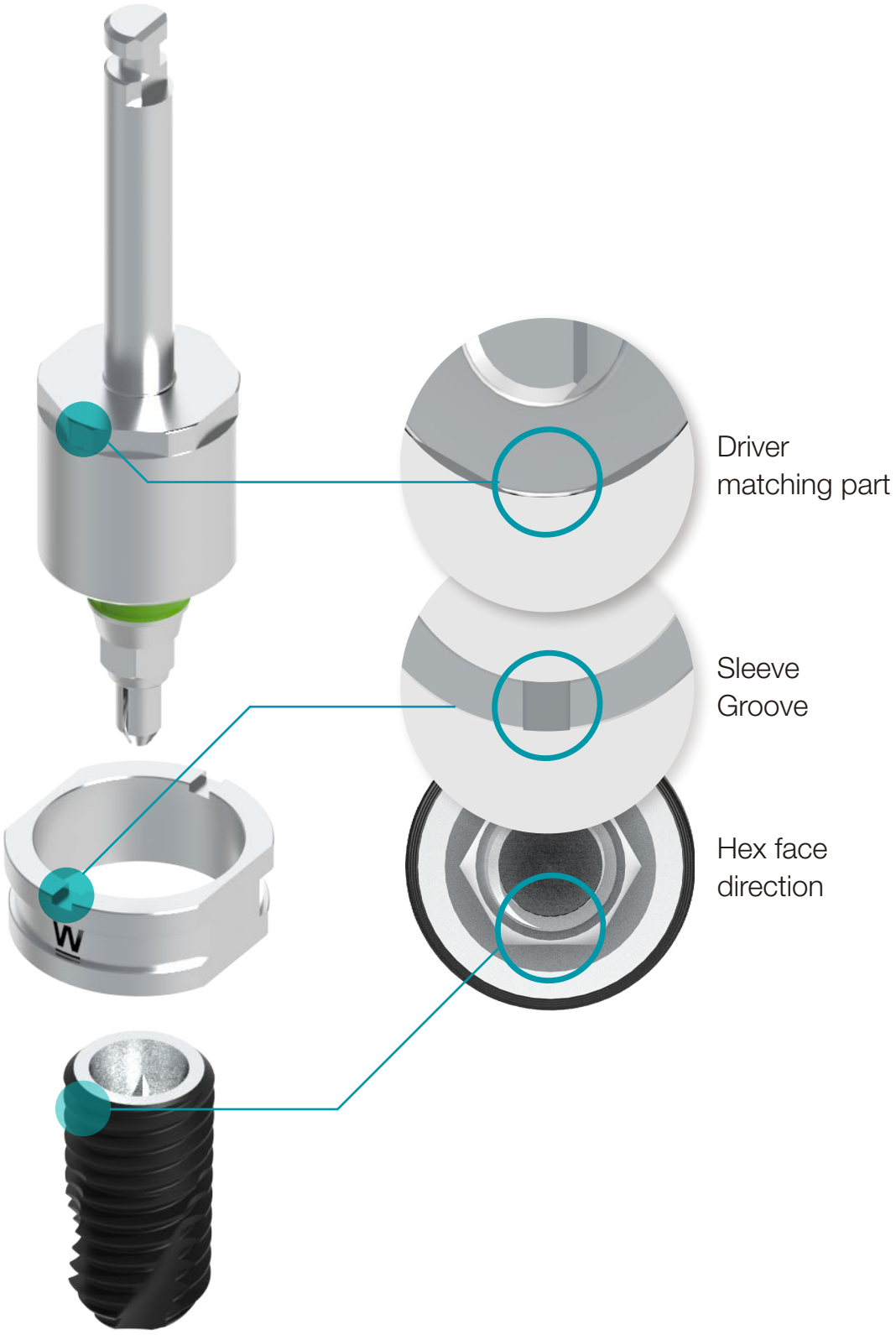

Bone Flattening Drill

- Bone leveling for accuracy prior to initial drilling

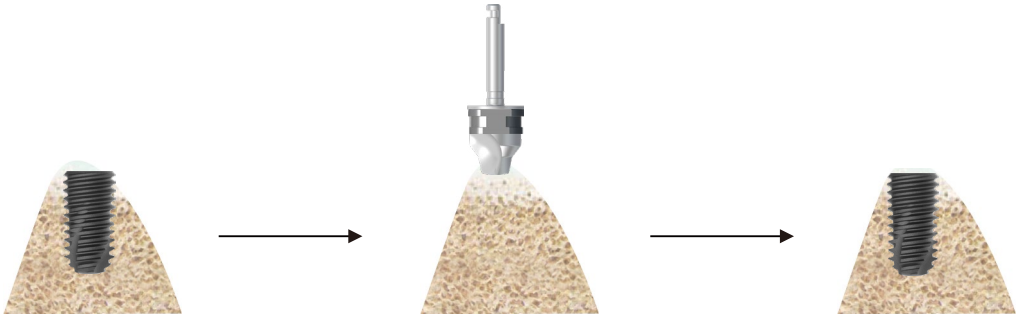

When planning implantation on inclined or irregular bones

Bone flattening

Stable implant placement

Other Surgical Instruments

Tissue Punch

- Marked with a gap of 2mm each to measure gingiva height
- Surgical instrument for Flapless surgery
- Material: Stainless Steel (TrimRite®)

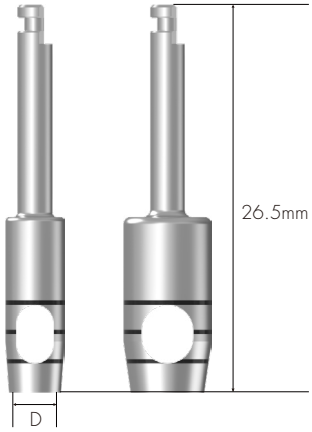

D (mm)	Ø3.3	Ø3.8	Ø4.3	Ø4.8	Ø5.3
	TP3308	TP3808	TP4308	TP4808	TP5308

Trephine Drill

- Use for collecting autogenous bone or removing failed fixture
- In case of Superwide fixture placement, available to use as initial drill
- Material: Stainless Steel (TrimRite®)

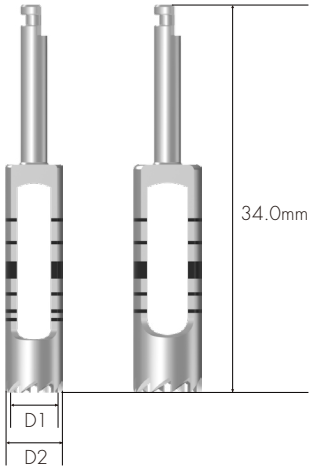

D1/D2 (mm)	Ø3.7/4.5	Ø4.2/5.0	Ø4.7/5.5	Ø5.2/6.0	Ø5.7/6.5	Ø6.2/7.0
	TD3718	TD4218	TD4718	TD5218	TD5718	TD6218

Bone Profiler

- Use for removing marginal bone around fixture during the one-stage and two-stages surgery
- Available to connect Healing Abutment by removing marginal bone after connecting Bone Profiler Guide Screw to the connection on Fixture
- Secure guided length of Bone Profiler Guide Screw to remove bone accurately for deeply placed fixture
- Bone Profiler Guide Screw is used for protecting fixture connection during use
- Material: Stainless Steel (TrimRite®)

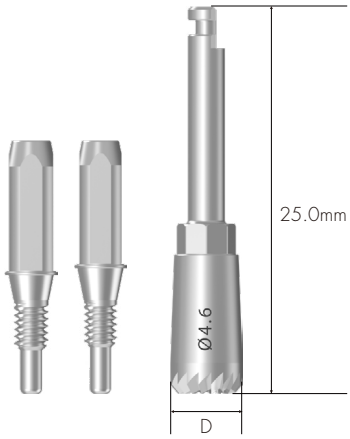

I-System ※ Only for I-System

D (mm)	Ø4.1 (For Ø3.0 X-Narrow)	Ø4.1 (For Ø3.0 Narrow)
	SBP41SXS	SBP41SNS

D (mm)	Ø4.1	Ø4.6	Ø5.6	Ø7.6
	SBP41SS	SBP46SS	SBP56SS	SBP76SS

T-System ※ Only for T-System

D (mm)	Ø4.1	Ø4.6	Ø5.6	Ø7.6
	SBP41TS	SBP46TS	SBP56TS	SBP76TS

R-System ※ Only for R-System

D (mm)	Ø4.1	Ø4.6	Ø5.6	Ø7.6
	SBP41RS	SBP46RS	SBP56RS	SBP76RS

	I-System				T-System	R-System	
	X-Narrow	Narrow	Mini	Regular	Mini	Mini	Regular
Bone Profiler Guide Screw	SBPGSSX14	SBPGSSN20	SBPGSSM20	SBPGSSR20	SBPGSTM20	SBPGSRM18	SBPGSRR18

Other Surgical Instruments

ZENEX Guide Start Drill

- Used for narrow or uneven ridges
- Stable cutting without splashing with multiple cutting edges
- Recommended to use before Twist Drill
- Stable drilling for follow-up drilling is possible
- Recommended speed: 1,200~1,500rpm
- Only for ZENEX Guide Kit (Mini, Wide specification not available)
- Material: Stainless Steel (TrimRite®)

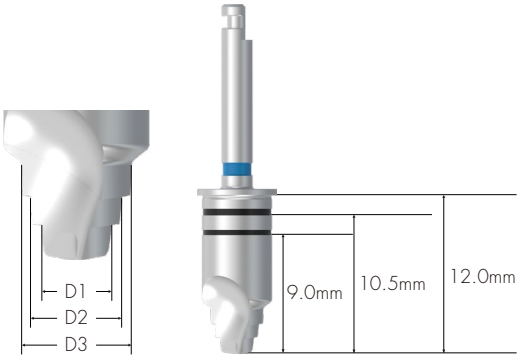

Fixture (Regular)	F3.5	F4.0	F4.5	F5.0
	ZGSD30R	ZGSD36R	ZGSD41R	ZGSD46R
Diameter (mm)	Ø 2.2 / 3.0	Ø 3.0 / 3.6	Ø 3.0 / 3.6 / 4.1	Ø 3.0 / 4.1 / 4.6
Color	Yellow	Green	Blue	Red

Information of Symbol



Catalog Number



Batch Code



Country of manufacture



Manufacturer



Consult instructions for use



Non-Sterile



Caution, Consult accompanying documents



Sterilized using irradiation



Do not re-use



Do not resterilize



Keep away from sunlight



Do not use if package is damaged and consult instructions for use

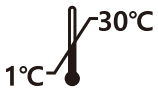

Temperature limitation



Use-by Date



Prescription Only



Authorized representative in Europe



Single sterile barrier system with protective packaging inside



Medical device



Unique device identifier



Specification



Packing Unit & Quantity



CE Mark



Ukrainian conformity assessment mark

The Izenimplant Implant System have not been evaluated for safety and compatibility in the MR environment. They have not been tested for heating, migration, or image artifact in the MR environment. The safety of Izenimplant Implant System in the MR environment is unknown. Scanning a patient who has this device may result in patient injury

Manufacturer Izenimplant Co.,Ltd.

1,2Dong, 26-32, Suworam 4-gil, Seotan-myeon, Pyeongtaek-si, Gyeonggi-do, 17703, Republic of Korea

Tel +82-31-662-0657 **Fax** +82-31-662-0658

IZEN IMPLANT

℞ only

Prescription Only

For USA Only

Federal law restricts this device to sale by or on the order of a dentist

EC REP

Authorized representative in Europe

KTR Europe GmbH

Mergenthalerallee 77, 65760, Eschborn, Germany

IZEN

IMPLANT

IZ-CAT-11 Rev.02(2024-01)

T-SYSTEM ZENEX MULTI & PLUS

IZEN IMPLANT

HQ & Factory

17703
1, 2Dong, 26-32, Suworam 4-gil, Seotan-myeon,
Pyeongtaek-si, Gyeonggi-do, Republic of Korea

Overseas Business Department

07788
10F 1dong #1011,#1012, #1013, #1014 Central-Tower II, 158,
Magokseo-ro, Gangseo-gu, Seoul, Republic of Korea

Tel. +82-31-662-0657 (HQ) +82-2-3664-3666 (Sales) **Fax.** +82-31-662-0658

Izenimplant Co.,Ltd
www.izenimplant.com